CTR 8500-8300

Virtual LAN

(VLAN) Configuration

Version: 3.16.0

260-668462-001

GA Release

Copyright & Terms of Use

October 2022

This documentation describes features and functions provided with CTR 8500-8300; Version: 3.16.0; GA Release.

Copyright © 2022 by Aviat Networks.

All rights reserved.

No part of this publication may be reproduced, transmitted, transcribed, stored in a retrieval system, or translated into any language or computer language, in any form or by any means, electronic, magnetic, optical, chemical, manual, or otherwise, without the prior written permission of Aviat Networks Inc.

To request permission, contact Aviat via **techpubs@aviatnet.com**.

Warranty

Aviat Networks makes no representation or warranties with respect to the contents hereof and specifically disclaims any implied warranties or merchantability or fitness for any particular purpose.

Further, Aviat Networks reserves the right to revise this publication and to make changes from time to time in the content hereof without obligation of Aviat Networks to notify any person of such revision or changes.

Safety Recommendations

The following safety recommendations must be considered to avoid injuries to persons and/or damage to the equipment:

- **Installation and Service Personnel:** Installation and service must be carried out by authorized personnel who have the technical training and experience necessary to be aware of any hazardous operations during installation and service, and of measures to avoid any danger to themselves, to any other personnel, and to the equipment.
- **Access to the Equipment:** Access to the equipment in use must be restricted to service personnel only.
- **Safety Norms:** Recommended safety norms are detailed in the Health and Safety sections of the product's Installation guide.
- **Service Personnel Skill:** Service personnel must have received adequate technical training on telecommunications, in particular the equipment and capabilities this addendum refers to.

Trademarks

All trademarks are the property of their respective owners.

WARNING

Making adjustments and/or modifications to this equipment that are not in accordance with the provisions of this instruction manual or other supplementary documentation may result in personal injury or damage to the equipment, and may void the equipment warranty.

AVERTISSEMENT

Tout réglage ou modification faits à cet équipement hors du cadre édicté par ce guide d'utilisation ou par toute autre documentation supplémentaire pourraient causer des blessures ou endommager l'équipement et peut entraîner l'annulation de sa garantie.

WARNUNG

Die an diesen Geräten gemachte Einstellungen und/oder Änderungen, welche nicht gemäß dieser Bedienungsanleitung, oder gemäß anderen zusätzlichen Anleitungen, ausgeführt werden, können Verletzungen oder Materialschäden zur Folge haben und eventuell die Garantie ungültig machen.

ATENCIÓN

Llevar a cabo ajustamientos y/o modificaciones a este equipo, sin seguir las instrucciones provistas por este manual u otro documento adicional, podría resultar en lesiones a su persona o daños al equipo, y anular la garantía de este último.

警告

不按该说明书有关条例或其它补充文件对该设备所做的调整和/或改型可能会引起人身伤害或损坏设备，并且设备保修也将失效。

Aviat Networks Technical Support

Service and Technical Support:

For customer service and technical support, contact one of the regional Technical Help Desks listed below.

Americas Technical Help Desk	EMEA Technical Help Desk	Asia Pacific Technical Help Desk
Aviat Networks, Inc. San Antonio, TX U.S.A.	Aviat Networks Motnica 9, 1236 Trzin Slovenia	Aviat Networks Clark Freeport Zone Philippines 2023
Phone: +1 210 526 6345 **Toll Free (USA):** +1 800 227 8332 **Fax:** +1 210 526 6315	**Phone:** +1 210 526 6345 **Fax:** +44 16 9871 7204 (English) +33 1 5552 8012 (French)	**Phone:** +1 210 526 6345 **Fax:** +63 45 599 5196
Email: **TACAM@aviatnet.com**	Email: **TACsupport@aviatnet.com**	Email: **TACsupport@aviatnet.com**

Global Support Hotline: +1 210 526 6345

Call this phone number for support from anywhere in the world. Aviat Networks' Global Support Hotline is available 24 hours a day, 7 days a week, providing uninterrupted support for all our customers.

When you call our Global Support Hotline:

- You will be greeted by an automated response that will ask you for your PIN#. Request a PIN# here: **https://aviatnetworks.com/how-can-aviat-help-you/pin-request-form/**
- As soon as you enter your PIN#, you will be transferred to our Global Technical Helpdesk that will assist you with your technical issue.
- If you do not have a PIN# your call will be answered by our Support Assurance Desk. Your call will be supported and prioritized accordingly.

Or you can contact your local Aviat Networks office. Contact information is available on our website at: **https://aviatnetworks.com/how-can-aviat-help-you/technical-support-tac/**

Sales and Sales Support:

For sales information, contact one of the headquarters, or find your regional sales office at: **https://aviatnetworks.com/.**

Corporate Headquarters USA	International Headquarters Singapore
Aviat Networks, Inc. 200 Parker Drive, Suite C100A Austin, Texas, 78728 U.S.A. **Phone:** +1 (512) 265-3680 **Fax:** +1 (512) 827-0350 **Toll Free for Sales Inquiries:** +1 888 478 9669	Aviat Networks(S) Pte. Ltd. 51 Changi Business Park Central 2 #04-10 The Signature Singapore 486066 **Phone:** +65 6496 0900 **Fax:** +65 6496 0999 **Sales Inquiries:** +1 321 674 4252

Conventions and Terminology

This document uses the following conventions and terminology.

Graphic Cues

The following items have graphic cues to identify important supporting information.

Note: A **note** item identifies additional information about a procedure or function.

Caution: A **caution** item identifies important information pertaining to actions that may cause damage to equipment, loss of data, or corruption of files.

Warning: A **warning** item identifies a serious physical danger or major possible problem.

Important: An **important** item identifies additional information that must be heeded.

Font Changes

Bold font style is used for the names of on-screen elements such as; fields, buttons, and drop-down selection lists, keywords, commands and for keys on the keyboard.

Courier font in **blue text** is used to indicate commands that the user needs to type in, with the command prompt shown as brown text.

```
AOS# show radio-carrier Carrier1/1
```

Any responses or report output from a command is shown as brown text and indented.

```
radio-carrier Carrier1/1
 status oper-status up
```

Red text highlights an action, which could be, for example:

- following a menu path
- selecting an option
- clicking a button
- clicking an icon
- pressing a keyboard key.

Common Terminology

Click or **Select:** Point the mouse pointer at the item you want to select, then quickly press, and release the left mouse button.

Right-Click: Point the mouse pointer at the item you want to select, then quickly press and release the right mouse button.

Product Compliance Notes

CTR 8540, CTR 8312, CTR 8311 and CTR 8380 has been tested for and meet all applicable EMC standards. The equipment was tested using screened cable; if any other type of cable is used, it may violate EMC compliance.

CTR 8540, CTR 8312, CTR 8311 and CTR 8380 are Class A products. In a domestic environment this product may cause radio interference in which case the user may be required to take adequate measures. This equipment is intended to be used exclusively in telecommunications centers.

Warning: ODU 600 part number EEH-26-1008-022 must not be co-located with mobile base stations operating in the 800 MHz frequency range.

FCC SDoC Statement

CTR 8300/8540 with ODU 600/ODU 600v2/IRU 600v3/IRU 600v4 meets the relevant specifications within FCC CFR 47, Part 101 and FCC CFR 47, Parts 15.107 and 15.109, where applicable. The responsible party, based in the United States, is:

Aviat Networks, Inc.
200 Parker Drive, Suite C100A
Austin, Texas, 78728
Tel: +1 512 265-3680

Regulatory Information for 5.8 GHz band

ODU 600

The following regulatory information applies to license-free operation on the 5.8 GHz band of ODU 600.

FCC Notices

- ODU 600, 5.8 GHz, must be professionally installed and maintained.
- This equipment has been tested and found to comply with the limits for a Class A digital device, pursuant to Part 15 of the FCC rules. These limits are designed to provide reasonable protection against harmful interference when the equipment is operated in a commercial environment. This equipment generates, uses and can radiate radio frequency energy and, if not installed and used in accordance with the instruction manual, may cause harmful interference to radio communications. Operation of this equipment in a residential environment is likely to cause harmful interference in which case the user will be required to correct the interference at their own expense.
- ODU 600, 5.8GHz, is compliant with the relevant parts of FCC CFR47, Part 15.407.
- To ensure compliance with the FCC RF exposure requirements, a minimum distance of 18 meters must be maintained between the antenna and any persons whilst the unit is operational. This calculation is based on the maximum conducted power and maximum antenna gain.
- ODU 600, 5.8 GHz, has been certified for use with a parabolic antenna with a maximum gain of 45.9 dBi or a flat panel antenna with a maximum gain of 28dBi.
- The filters and software provided with this product allow for transmission only in the frequency range 5725 – 5850 MHz to ensure compliance with Part 15.407.
- According to the conducted power limit in FCC CFR 47, Part 15.407, the power for this device has been limited to 1 W (30 dBm) at the antenna port.
- FCC CFR47, Part 15.407 excludes the use of point-to-multipoint systems, omnidirectional applications and multiple co-located intentional radiators. This system is only for fixed, point-to-point operation.

International Use of 5.8 GHz

ODU 600 with CTR 8540, CTR 8312, CTR 8311, or CTR 8380, 5.8 GHz, does not employ DFS, and as such the equipment cannot be deployed within Europe or any country where DFS is a regulatory requirement for protection of radars.

Networking Devices in Electric Power Substations

For IEEE 1613 compliant products, category 7 Ethernet cables must be used in order to ensure compliance.

WEEE Directive

In accordance with the WEEE Directive (2012/19/EU), CTR 8540, CTR 8312, CTR 8311 and CTR 8380 are marked with the following symbol:

This symbol indicates that this equipment must be collected separately for the purposes of recovery and/or recycling.

For information about collection and recycling of equipment please contact your local Aviat Networks sales office. If you purchased your product via a distributor, please contact the distributor for information regarding collection and recovery/recycling.

More information on the WEEE Directive is available at our website:

http://www.aviatnetworks.com/products/compliance/weee/ .

(WEEE is the acronym for Waste Electrical and Electronic Equipment)

RoHS Directive

CTR 8540, CTR 8312, CTR 8311 and CTR 8380 meet the requirements of RoHS directive 2011/65/EU.

Declaration of Conformity, Radio Equipment Directive (RED), 2014/53/EU

Bulgarian	С настоящото Aviat Networks декларира, че този тип радиосъоръжение ODU 600/ODU 600sp with CTR 8311, CTR 8312, CTR 8380, CTR 8540 е в съответствие с Директива 2014/53/ЕС.
Croatian	Aviat Networks ovime izjavljuje da je radijska oprema tipa ODU 600/ODU 600sp with CTR 8311, CTR 8312, CTR 8380, CTR 8540 u skladu s Direktivom 2014/53/EU.
Czech	Tímto Aviat Networks prohlašuje, že typ rádiového zařízení ODU 600/ODU 600sp with CTR 8311, CTR 8312, CTR 8380, CTR 8540 je v souladu se směrnicí 2014/53/EU.
Danish	Hermed erklærer Aviat Networks, at radioudstyrstypen ODU 600/ODU 600sp with CTR 8311, CTR 8312, CTR 8380, CTR 8540 er i overensstemmelse med direktiv 2014/53/EU.
Dutch	Hierbij verklaar ik, Aviat Networks, dat het type radioapparatuur ODU 600/ODU 600sp with CTR 8311, CTR 8312, CTR 8380, CTR 8540 conform is met Richtlijn 2014/53/EU.
English	Hereby, Aviat Networks declares that the radio equipment type ODU 600/ODU 600sp with CTR 8311, CTR 8312, CTR 8380, CTR 8540 is in compliance with Directive 2014/53/EU.
Estonian	Käesolevaga deklareerib Aviat Networks, et käesolev raadioseadme tüüp ODU 600/ODU 600sp with CTR 8311, CTR 8312, CTR 8380, CTR 8540 vastab direktiivi 2014/53/EL.
Finnish	Aviat Networks vakuuttaa, että radiolaitetyyppi ODU 600/ODU 600sp with CTR 8311, CTR 8312, CTR 8380, CTR 8540 on direktiivin 2014/53/EU mukainen.

French	Le soussigné, Aviat Networks, déclare que l'équipement radioélectrique du type ODU 600/ODU 600sp with CTR 8311, CTR 8312, CTR 8380, CTR 8540 est conforme à la directive 2014/53/UE.
German	Hiermit erklärt Aviat Networks, dass der Funkanlagentyp ODU 600/ODU 600sp with CTR 8311, CTR 8312, CTR 8380, CTR 8540 der Richtlinie 2014/53/EU entspricht.
Greek	Με την παρούσα ο/η Aviat Networks, δηλώνει ότι ο ραδιοεξοπλισμός ODU 600/ODU 600sp with CTR 8311, CTR 8312, CTR 8380, CTR 8540 πληροί την οδηγία 2014/53/ΕΕ.
Hungarian	Aviat Networks igazolja, hogy a ODU 600/ODU 600sp with CTR 8311, CTR 8312, CTR 8380, CTR 8540 típusú rádióberendezés megfelel a 2014/53/EU irányelvnek.
Icelandic	Hér með lýsir Aviat Networks yfir því að ODU 600/ODU 600sp with CTR 8311, CTR 8312, CTR 8380, CTR 8540 er í samræmi við grunnkröfur og aðrar kröfur, sem gerðar eru í tilskipun 2014/53/EU.
Italian	Il fabbricante, Aviat Networks, dichiara che il tipo di apparecchiatura radio ODU 600/ODU 600sp with CTR 8311, CTR 8312, CTR 8380, CTR 8540 è conforme alla direttiva 2014/53/UE.
Latvian	Ar šo Aviat Networks deklarē, ka radioiekārta ODU 600/ODU 600sp with CTR 8311, CTR 8312, CTR 8380, CTR 8540 atbilst Direktīvai 2014/53/ES.
Lithuanian	Aš, Aviat Networks, patvirtinu, kad radijo įrenginių tipas ODU 600/ODU 600sp with CTR 8311, CTR 8312, CTR 8380, CTR 8540 atitinka Direktyvą 2014/53/ES.
Maltese	B'dan, Aviat Networks, niddikjara li dan it-tip ta' tagħmir tar-radju ODU 600/ODU 600sp with CTR 8311, CTR 8312, CTR 8380, CTR 8540 huwa konformi mad-Direttiva 2014/53/UE.
Norwegian	Aviat Networks erklærer herved at utstyret ODU 600/ODU 600sp with CTR 8311, CTR 8312, CTR 8380, CTR 8540 er i samsvar med de grunnleggende krav og øvrige relevante krav i direktiv 2014/53/EU.
Polish	Aviat Networks niniejszym oświadcza, że typ urządzenia radiowego ODU 600/ODU 600sp with CTR 8311, CTR 8312, CTR 8380, CTR 8540 jest zgodny z dyrektywą 2014/53/UE.
Portuguese	O(a) abaixo assinado(a) Aviat Networks declara que o presente tipo de equipamento de rádio ODU 600/ODU 600sp with CTR 8311, CTR 8312, CTR 8380, CTR 8540 está em conformidade com a Diretiva 2014/53/UE.
Romanian	Prin prezenta, Aviat Networks declară că tipul de echipamente radio ODU 600/ODU 600sp with CTR 8311, CTR 8312, CTR 8380, CTR 8540 este în conformitate cu Directiva 2014/53/UE.
Slovak	Aviat Networks týmto vyhlasuje, že rádiové zariadenie typu ODU 600/ODU 600sp with CTR 8311, CTR 8312, CTR 8380, CTR 8540 je v súlade so smernicou 2014/53/EÚ.
Slovenian	Aviat Networks potrjuje, da je tip radijske opreme ODU 600/ODU 600sp with CTR 8311, CTR 8312, CTR 8380, CTR 8540 skladen z Direktivo 2014/53/EU.
Spanish	Por la presente, Aviat Networks declara que el tipo de equipo radioeléctrico ODU 600/ODU 600sp with CTR 8311, CTR 8312, CTR 8380, CTR 8540 es conforme con la Directiva 2014/53/UE.
Swedish	Härmed försäkrar Aviat Networks att denna typ av radioutrustning ODU 600/ODU 600sp with CTR 8311, CTR 8312, CTR 8380, CTR 8540 överensstämmer med direktiv 2014/53/EU.

Full declarations of conformity are available here:

- CTR 8311, 8312 with ODU 600v2: **https://view.highspot.com/viewer/60d35bfdf7794d471a56db18**
- CTR 8540 with ODU 600v2: **https://view.highspot.com/viewer/60d35c9a34d6be2c490aa999**

Country Availability Matrix

Aviat's radios are classified under the Radio Equipment Directive (2014/53/EU) as Class 2 products. For details of where the equipment is intended to be used, see the country matrix below. Aviat Networks intends to market this equipment where a cross (X) is shown.

Band (GHz)	**L6**	**U6**	**07**	**08**	**10**	**11**	**13**	**15**	**18**	**23**	**26**	**28**	**32**	**38**	**42**
Austria	X	X	X	X	X	X	X	X	X	X	X	X	X	X	X
Belgium	X	X	X	X		X	X	X	X	X	X	X	X	X	
Bulgaria	X	X	X	X	X	X	X		X	X	X	X	X	X	
Croatia	X	X	X	X		X	X	X	X	X		X	X	X	X
Cyprus	X	X	X	X	X	X	X	X	X	X	X	X	X	X	
Czech Republic	X	X	X			X	X	X	X	X	X		X	X	
Denmark	X	X	X			X	X	X	X	X	X		X	X	X
Estonia	X	X	X	X	X	X	X	X	X	X	X	X	X	X	X
Finland	X	X	X	X	X		X	X	X	X	X	X	X	X	X
France	X	X	X	X	X	X	X	X	X	X	X	X	X	X	
Germany	X	X	X	X	X	X	X	X	X	X	X	X	X	X	X
Greece	X		X				X	X	X	X	X			X	
Hungary	X	X	X	X		X	X	X	X	X	X			X	
Iceland	X	X	X	X	X	X	X	X	X	X	X	X		X	
Ireland	X	X	X	X		X	X	X	X	X	X			X	
Italy	X	X	X	X	X	X	X	X	X	X	X		X	X	
Latvia	X	X	X	X			X	X	X	X	X	X		X	
Lithuania	X	X	X	X	X	X	X	X	X	X	X	X	X	X	
Luxembourg	X	X	X	X	X		X	X	X	X	X	X	X	X	
Malta	X	X	X	X	X	X	X	X	X	X			X	X	X
Netherlands	X	X	X				X	X	X	X	X	X	X	X	
Norway	X	X	X	X	X	X	X	X	X	X	X	X		X	X
Poland	X	X	X	X		X	X	X	X	X	X	X	X	X	X
Portugal	X	X	X	X		X	X	X	X	X	X			X	X
Romania	X	X	X	X	X	X	X	X	X	X	X	X	X	X	X
Slovak Republic	X	X	X		X	X	X	X	X	X	X	X	X	X	
Slovenia	X	X	X	X		X	X	X	X	X	X	X	X	X	X
Spain	X	X		X	X	X	X	X	X	X	X	X		X	
Sweden	X	X	X	X			X	X	X	X	X		X	X	
Switzerland	X	X	X		X	X	X	X	X	X	X	X	X	X	X
United Kingdom	X	X	X			X	X	X	X	X	X	X	X	X	X

A license to operate this equipment will be required and the relevant regulator must be contacted prior to installation and commissioning.

Contents

Copyright & Terms of Use iii
Aviat Networks Technical Support v
Conventions and Terminology vi
Product Compliance Notes vii
FCC SDoC Statement vii
Regulatory Information for 5.8 GHz band vii
FCC Notices vii
Networking Devices in Electric Power Substations viii
WEEE Directive viii
RoHS Directive viii
Declaration of Conformity, Radio Equipment Directive (RED), 2014/53/EU viii
Country Availability Matrix x
Contents xi
Chapter 1. VLAN Introduction 17
Purpose and Scope 17
Acronyms 17
References 18
CLI configuration modes 18
VLAN CLI configuration mode 19
VLAN Protocol Description 19
Chapter 2. VLAN Configuration 21
Configuring Guidelines 21
Bridge Mode Support 22
Customer bridge mode 22
Provider edge bridge mode 22
Default Configurations 22
Configuring Static VLAN 23
Static VLAN configuration 23
Deleting a VLAN or L3 Interface 25
Enabling VLANs 25
Using the VLAN active command 25
Configuring Static Unicast Entry 25
Procedure 25
Configuring Static Multicast Entry 26
Procedure 26
Configuring VLAN Learning Mode and Type 26
Configuring Dynamic VLAN Learning 28
Procedure 28
Configuring Dynamic Multicast Learning 29
Procedure 29
Configuring Restricted VLAN Registration 30
Procedure 30
Configuring Restricted Group Registration 32
Procedure 33

Changing the Forwarding Mode 34
Forward-all 34
Forward-unregistered 35
Classifying Frames to a VLAN 35
Port-based classification 35
Port and protocol based classification 36
MAC based classification 37
Enabling Tunneling on a Port 38
Procedure 38
Tunneling of STP packets 40
Configuring Port Filtering 40
Configuring acceptable frame type 40
Configuring ingress filtering 41
Configuring filtering utility criteria 41
Configuring WildCard Entry 42
Chapter 3. Bridge Mode Configuration 43
Configuring Bridge Mode during System Initialization 43
Configuring Bridge Mode during System Runtime 44
Procedure 44
Chapter 4. Provider Bridge Configurations 45
Configuring Provider Bridge Port Types 45
Procedure 46
Configuring C-VLAN Component 46
Provider Edge Port Configurations 46
C-VLAN Component Spanning Tree Configurations 49
Configuration of C-VLAN Component Spanning Tree parameters 49
Configuring C-VLAN Spanning Tree module status 49
Configuring S-VLAN Component 50
Procedure 50
Configuring a Flow for 802.1ad Bridge Port Type 52
Configuring connectivity through CEP 52
Configuring transparent connectivity through CNP (Port Based) 52
Handling Priority in Provider Bridges 53
Configuring PCP Encoding table 53
Configuring PCP Decoding table 54
Configuring PCP Selection Row 54
Configuring Service Priority Regeneration table 55
Configuring Use DEI 56
Configuring VLAN Translation Table 56
Procedure 56
Tunneling in Provider Network 57
Tunneling Spanning Tree protocol 58
Tunneling GVRP protocol 58
Tunneling GMRP protocol 58
Tunneling IGMP protocol 58
Tunneling DOT1X protocol 58
Tunneling LACP protocol 58

Configuring tunnel MAC address 59
Protocol Tunneling in Customer Bridges..... 60
Configuring Port MAC Learning Status and Limit..... 60
Procedure 60
Configuring Static Multicast MAC Limit 61
Procedure 61
Configuring Ether Type Swap Table 61
Procedure 61
Configuring Customer Port VLAN ID 62
Procedure 62
Configuring S-VLAN 63
Procedure 63
Configuring Ingress and Egress Ether Type 63
Procedure 64
Configuring Proprietary Port Types..... 65
Procedure 65
Chapter 5. Configuration of CTR 8540 with Multiple Instances 67
Displaying Various Configurations 69
Chapter 6. Flow Based Configuration..... 71
Configuring Static Unicast Entry 72
Configuration guidelines 72
Default configurations 72
Configuring Static Multicast Entry 73
Configuration guidelines 73
Default configurations 73
Procedure 73
Configuring GVRP 74
Dynamic VLAN learning 74
Configuring Restricted VLAN registration 75
Configuring GMRP 77
Dynamic Multicast Group learning 77
Configuring Restricted Group Registration 79
Forward–All 80
Configuration guidelines 80
Procedure 80
Classifying VLAN..... 82
PVID based classification..... 82
Port and MAC based classification..... 83
Port and Protocol based classification 85
Configuring Acceptable Frame Types..... 87
Configuration guidelines 87
Procedure 87
Configuring Ingress Filtering..... 88
Configuration guidelines 88
Procedure 88

Chapter 7. Flow Based Provider Bridge Configuration 91

Configuring Service Using C-VLAN Based Service Interface and Port-Based Service Interface92
Configuration guidelines 92
Default configurations 92
Procedure 92

Translating VLAN in Provider Networks 97
Configuration Guidelines 97
Default configurations 98
Procedure 98

Configuring PCP Decoding and Encoding Table 100
Configuration guidelines 100
Default configurations 100
Procedure 100

Configuring Provider Edge Port Configurations and Service Priority Regeneration Table 101
Configuration guidelines 101
Default configurations 101
Procedure 102

Tunneling Of Customer STP Packets and Customer GVRP Protocol Packets – Provider Bridges103
Configuration guidelines 103
Default configurations 103
Procedure 103

Tunneling of Dot1x Protocol in Provider Bridges 107
Configuration guidelines 107
Default configurations 107
Procedure 107

Tunneling Of Customer STP Packets and Customer GVRP Protocol Packets – Customer Bridges 111
Configuration guidelines 111
Default configurations 111
Procedure 111

Tunneling of Dot1x Protocol in Customer Bridges 116
Configuration guidelines 116
Default configurations 116
Procedure 116

Tunnelling Over Q-in-Q Bridge 120
Configuration guidelines 120
Default configurations 120
Procedure 120

Port-Based MAC Address Limiting 122
Configuration guidelines 122
Default configurations 122
Procedure 122

VLAN-Based MAC Address Limiting 123
Configuration guidelines 123
Default configurations 124
Procedure 124
Customer controlled provider bridges 124
Proprietary Provider Network Port 125

Chapter 1. VLAN Introduction

In this chapter

Purpose and Scope 17
Acronyms 17
References 18
CLI configuration modes 18
VLAN Protocol Description 19

Purpose and Scope

The Aviat Networks VLAN product facilitates grouping devices on different physical LAN segments. These virtual LANs (VLANs) can communicate with each other as if they are all on the same physical LAN segment, i.e. a network of computers that behave as if they are connected to the same wire even though they can b ephysically located on different segments of a LAN. VLANS are configured through software rather than hardware, making them extremely flexible.

This document describes configuring VLANs on a switch running Aviat Networks CTR 8540 or CTR 8300.

Acronyms

This table lists acronyms used in this document.

Table 1: Acronyms

Acronym	Explanation
BPDU	Bridge Protocol Data Unit
ACL	Access Control list
CBS	Controlled Burst Size
CEP	Customer Edge Port
CIR	Controlled Information Rate
CNP	Customer Network Port
COS	Class of Service
CVID	Customer VLAN Id
C-VLAN	Customer VLAN
DEI	Drop Eligible Indicator
DSCP	Differentiated Services Code Point
EBS	Excess Burst Size
EIR	Excess Information Rate
E-LAN	Multipoint to Multipoint connectivity
E-LINE	Point to Point connectivity
FID	Filtering Identifier
GARP	Generic Attribute Registration Protocol
GMRP	GARP Multicast Registration Protocol
GVRP	GARP VLAN Registration Protocol
ID	Identifier
IVL	Independent VLAN Learning
LAN	Local Area Network
MI	Multiple Instance
PCB	Provider Core Bridge

Acronym	Explanation
PCEP	Proprietary Customer Edge Port
PCNP	Proprietary Customer Network Port
PCP	Priority Code Point
PEB	Provider Edge Bridge
PEP	Provider Edge Port
PNAC	Port Based Network Authentication Protocol
PNP	Provider Network Port
PPNP	Proprietary Provider Network Port
PVID	Port VLAN ID
RSTP	Rapid Spanning Tree Protocol
STP	Spanning Tree Protocol
SVL	Shared VLAN Learning
S-VLAN	Service VLAN
TOS	Type of Service
VID	VLAN Identifier
VLAN	Virtual Local Area Network

References

- CTR 8500-8300 CLI Reference Guides.

CLI configuration modes

This table lists the access and exit methods to the various CLI configuration modes.

Table 2: General Configurations

Command mode	Access method	Prompt	Exit method
User EXEC	This is the initial mode to start a session.	aos>	The logout method is used.
Privileged EXEC	Use the `enable` command to enter the Privileged EXEC mode.	aos#	Use the command `disable` to return from the Privileged EXEC mode to User EXEC mode, the disable command is used.
Global Configuration	Enter Privileged EXEC mode and use the command `configure terminal` to enter the Global Configuration Mode.	aos(config)#	Use the command `exit` to log out of the Global Configuration Mode, and the command `end` to log out of the Privileged EXEC mode.
Interface Configuration	In Global Configuration Mode, use the command `command interface <interface-type><interface-id>` to enter the Interface Configuration Mode.	aos(config-if)#	Use the command `exit` to log out of the Global Configuration Mode, and the command `end` to log out of the Privileged EXEC mode.

VLAN CLI configuration mode

The following table provides the access and exit methods to various general configuration modes.

Table 3: VLAN Configurations

Command mode	Access method	Prompt	Exit method
VLAN Configuration	The Global Configuration Mode command VLAN <VLANid>, is used to enter the VLAN configuration mode.	aos(config-vlan)#	Use the command exit to log out of the Global Configuration Mode, and the command end to log out of the Privileged EXEC mode.

VLAN Protocol Description

Virtual LAN (VLAN) technology, defined under the IEEE 802.1q specifications, allows enterprises to extend the reach of their corporate networks across WAN. VLANs enable partitioning of a LAN based on functional requirements, while maintaining connectivity across all devices on the network. VLAN groups network devices and enable them to behave as if, they are in one single network. Data security is ensured by keeping the data exchanged between the devices of a particular VLAN within the same network.

VLAN offers a number of advantages over traditional LAN. They are:

- **Performance** - In networks with traffic consisting of a high percentage of broadcasts and multicasts, VLAN minimizes the possibility of sending the broadcast and multicast traffic to unnecessary destinations.
- **Formation of Virtual Workgroups** - VLAN helps in forming virtual workgroups. During this period, communication between the members of the workgroup will be high. Broadcasts and multicasts can be restricted within the workgroup.
- **Simplified Administration** - Most of the network costs are a result of adds, moves, and changes of users in the network. Every time a user is moved in a LAN, recabling, new station addressing, and reconfiguration of hubs and routers becomes necessary. Some of these tasks can be simplified with the use of VLANs.
- **Reduced Cost -** VLANs can be used to create broadcast domains, which eliminate the need for expensive routers.
- **Security -** Sensitive data may be periodically broadcast on a network. Placing only those users, who are allowed to access to such sensitive data on a VLAN can reduce the chances of an outsider gaining access to the data. VLAN can also be used to control broadcast domains, set up firewalls, restrict access, and inform the network manager of an intrusion.

Aviat Networks VLAN logically segments the shared media LAN, forming virtual workgroups. It redefines and optimizes the basic Transparent Bridging functionality such as learning, forwarding, filtering and flooding.

Chapter 2. VLAN Configuration

The following sections describe the configuration of VLAN running as a part of Aviat Networks CTR 8540.

In this chapter

Configuring Guidelines 21
Bridge Mode Support 22
Default Configurations 22
Configuring Static VLAN 23
Deleting a VLAN or L3 Interface 25
Enabling VLANs 25
Configuring Static Unicast Entry 25
Configuring Static Multicast Entry 26
Configuring VLAN Learning Mode and Type 26
Configuring Dynamic VLAN Learning 28
Configuring Dynamic Multicast Learning 29
Configuring Restricted VLAN Registration 30
Configuring Restricted Group Registration 32
Changing the Forwarding Mode 34
Classifying Frames to a VLAN 35
Enabling Tunneling on a Port 38
Configuring Port Filtering 40

Configuring Guidelines

Follow these configuration guidelines:

- VLAN is enabled in the switch by default. GVRP and GMRP must be disabled prior to disabling VLAN.
- The default VLAN - VLAN 1- cannot be deleted in the switch.
- The default L3 interface - interface VLAN 1 - can be deleted in the switch.
- If port GVRP state is disabled, but global GVRP status is enabled, then GVRP is disabled on the current port. GVRP packets received on that port will be discarded and GVRP registrations from other ports will not be propagated on this port.
- GARP cannot be started if VLAN is shutdown.
- GARP cannot be shutdown, if GVRP and/or GMRP are enabled.
- Mapping of a forwarding database identifier (FID) to VLANs is successful only when the VLAN learning mode is hybrid.
- To configure a static unicast/multicast MAC address in the forwarding database, the VLAN must have been configured and member ports must have been configured for the specified VLAN.
- Bridge-mode status cannot be set to provider mode, if the protocol/MAC based VLAN is enabled.
- You cannot configure a port as trunk if the port is an untagged member of a VLAN.
- Leave Timer must be two times greater than Join Timer, and Leaveall Timer must be greater than Leave Timer. For GARP timers: Leave Timer must be two times greater than Join Timer, and Leaveall Timer must be greater than Leave Timer.
- The following require provider base bridge mode, which is not supported in this release:
  - To enable Dot1q-tunneling status, Bridge Mode must be set to 'provider'.

- To enable the Dot1q-tunnel status on the port, the port mode must be set with the type 'access'.
- To enable Dot1q tunneling on a port 802.1X (PNAC), port control must be force-authorized.
- BPDU tunneling on the port cannot be set; if Dot1q tunnel status is disabled.

Bridge Mode Support

This VLAN supports two bridge modes:

- Customer bridge mode
- Provider edge bridge mode

Customer bridge mode

With this bridge mode, the device behaves as a normal switch that works with untagged or C-VLAN tagged frames.

Port types:

- Customer Bridge Port (default)

Provider edge bridge mode

With this bridge mode, the device is used in an operator network. this mode enables setup of Ethernet services for the operators customers encapsulating untagged or C-VLAN tagged frames with another provider or S-VLAN tag.

Port types:

- Provider Network Port (default)
- Customer Edge Port
- Customer Network Port port-based
- Customer Network Port s-tagged
- Proprietary Provider Network Port

Where Proprietary port types support more classification mechanisms than defined by the standard, the standard port types include only restricted S- VLAN classification mechanisms.

Whereas PCEP and PCNP supports various types of S- VLAN classification mechanisms. These include:

- Source Mac
- Destination Mac
- C- VLAN + Source Mac
- C- VLAN + Destination Mac
- Dscp
- C- VLAN + Dscp
- Source IP
- Destination IP
- Source IP + Destination IP
- C- VLAN + Destination IP and PVID

Default Configurations

Table 4: Default Configurations

Feature	Default setting
VLAN Module status	Enable
Default VLAN Id configured in the switch	1

Feature	Default setting
Mac based VLAN Classification	Disabled
Protocol-VLAN based classification	Enabled
System and port level GVRP and GMRP Module status	Disabled
Mac address table aging time	300 seconds
Acceptable frame types	All (Accepts untagged frames or priority-tagged frames or tagged frames received on the port)
Ingress filtering	Disabled
Switch port priority	0
Switch port mode	Hybrid
GARP Timers	Join: 20 seconds Leave: 60 seconds Leave all: 1000 seconds
Max traffic classes	Maximum number of traffic classes supported on a port is 8.
Tunneling	Disabled

Note: If there are provider bridges, the default configurations and configuration guidelines are provided in the relevant subsection of the documentation.

Figure 1: Topology for VLAN Configuration

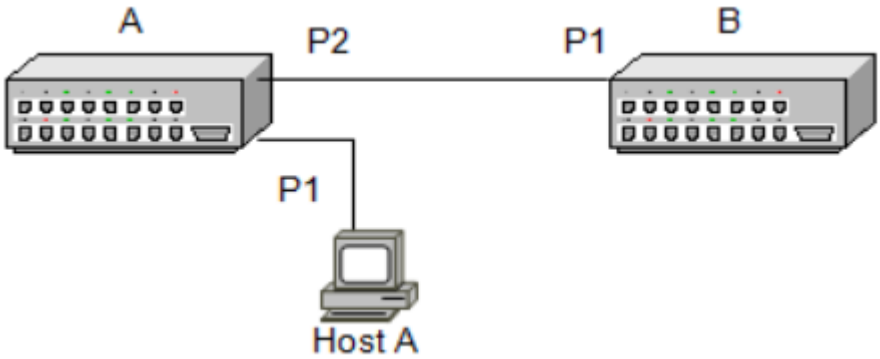

Configuring Static VLAN

Static VLAN entries can be configured with the required number of member ports, untagged ports and forbidden ports. The following configuration deals with the creation of member ports.

Static VLAN configuration

Execute the following commands to configure Static VLAN entry in the switch.

Step	Action
1	Enter the Global Configuration Mode. `aos# configure terminal`
2	Enter the VLAN Configuration Mode (for VLAN 2). `aos(config)# VLAN 2`

Step	Action
3	Add member ports for VLAN. `aos(config-VLAN)# ports gigabitethernet 0/2-5 untagged gigabitethernet 0/3` Member ports represent the set of ports permanently assigned to the VLAN egress list. Frames belonging to the specified VLAN are forwarded to the ports in the egress list. If the port type is not explicitly specified as untagged, then all the ports are configured to be of tagged port type allowing transmission of frames with the specified VLAN tag. The untagged setting allows the port to transmit the frames without a VLAN tag. This setting is used to configure a port connected to an end user device. In the above example, the packets for the interface gigabitethernet 0/3 are transmitted without the tag. On all the other ports, the packets are transmitted with the tag.
4	Configure port 1 as forbidden port. `aos(config-VLAN)# ports gigabitethernet 0/2-5 forbidden gigabitethernet 0/1` Alternatively, the forbidden setting prevents the port from participating in the specified VLAN activity and ensures that, any dynamic requests for the port to join the VLAN will be ignored.
5	Exit from the configuration mode. `aos(config)# end`

6	View the VLAN information by executing the following command.
	`aos# show VLAN summary`
	`Number of VLANs: 2`
	The output displays the number of VLANs in a switch.

7	View the configuration details of all the VLANs by executing the following show command.
	`aos# sh VLAN`
	`Switch default`
	`VLAN database`
	`----------`
	`VLAN ID : 1`
	`Member Ports : Gi0/1, Gi0/2, Gi0/3, Gi0/4, Gi0/5, Gi0/6`
	`Gi0/7, Gi0/8, Gi0/9, Gi0/10, Gi0/11, Gi0/12, Prot1`
	`Untagged Ports : Gi0/1, Gi0/2, Gi0/3, Gi0/4, Gi0/5, Gi0/6`
	`Gi0/7, Gi0/8, Gi0/9, Gi0/10, Gi0/11, Gi0/12, Prot1`
	`Forbidden Ports : None`
	`Name :`
	`Status : Permanent`
	`Egress Ethertype : 0x8100`
	`----------`
	`VLAN ID : 2`
	`Member Ports : Gi0/1`
	`Untagged Ports : Gi0/1`
	`Forbidden Ports : None`
	`Name :`
	`Status : Permanent`
	`Egress Ethertype : 0x8100`
	`----------`

8	View the configuration details of a particular VLAN by executing the following command.
	`aos# show VLAN id 2`
	`VLAN database`
	`----------`
	`VLAN ID : 2`
	`Member Ports : Gi0/2, Gi0/3, Gi0/4, Gi0/5`
	`Untagged Ports : None`
	`Forbidden Ports : Gi0/1`
	`Name :`
	`Status : Permanent`
	`----------`

Deleting a VLAN or L3 Interface

It is possible to delete a VLAN from the VLAN list. This uses the no VLAN <VLAN-id(1-4094)> Global Configuration Mode command.

```
aos(config)# no VLAN 4
```

You can also delete the default L3 interface.

```
aos(config)# no vlan 1
  % Default Vlan Cannot be Deleted.
aos(config)# no int vlan 1
aos(config)#
aos(config)# do sh ip int
  vlan2 is up, line protocol is up
  Internet Address is 10.16.15.135/16
  Broadcast Address 10.16.255.255
```

Enabling VLANs

A VLAN can be made active in two ways:

- By adding a member port to a VLAN (refer to section **Configuring Static VLAN** (on page 23)) or
- By using the VLAN active command.

Using the VLAN active command

The VLAN active command is used to make a VLAN active in the switch.

Procedure

Step	Action
1	Enter the Global Configuration Mode. `aos#configure terminal`
2	Configure VLAN 2 in the switch. `aos(config)# VLAN 2`
3	Execute the following command to enable VLAN. `aos(config-VLAN)# VLAN active` **Note:** If the VLAN active command is used without configuring the member ports, then VLAN will have zero member ports.

Configuring Static Unicast Entry

Configuring a Static Unicast Entry requires the VLAN to be configured and the member ports for that specified VLAN must also be configured.

Execute the following commands to configure a Static Unicast Entry in the VLAN table.

Procedure

Step	Action
1	Enter the Global Configuration Mode. `aos#configure terminal`
2	Configure VLAN 2 in the switch. `aos(config)# VLAN 2`
3	Configure a static VLAN entry with the required type of ports. `aos(config-VLAN)#ports gigabitethernet 0/2 untagged gigabitethernet 0/2`
4	Exit from the Config-VLAN Mode. `aos(config-VLAN)#exit`

Step	Action
5	Configure a static unicast MAC address in the forwarding database. `aos(config)# mac-address-table static unicast 22:22:22:22:22:22 VLAN 2 recv-port gigabitethernet 0/1 interface gigabitethernet 0/2`

6	View the configuration details by executing the following command.
	`aos# sh mac-address table static unicast`
	`Switch default`
	`VLAN Mac Address RecvPort Status Ports`
	`---- ---------- -------- ------ -----`
	`2 22:22:22:22:22:22 Gi0/1 Permanent Gi0/2`
	`Total Mac Addresses displayed: 1`

Configuring Static Multicast Entry

To configure a Static Multicast Entry for a specified VLAN:

- The VLAN must have been configured previously.
- The member ports for that VLAN must also be configured.

Execute the following commands to configure Static Multicast Entry in the VLAN table.

Procedure

Step	Action
1	Enter the Global Configuration Mode. `aos#configure terminal`
2	Configure VLAN 2 in the switch. `aos(config)# VLAN 2`
3	Configure a static VLAN entry with the required type of ports. `aos(config-VLAN)#ports gigabitethernet 0/2 untagged gigabitethernet 0/2`
4	Exit from the Config-VLAN mode. `aos(config-VLAN)#exit`
5	Configure static Multicast MAC address in the forwarding database. `aos(config)# mac-address-table static multicast 01:02:03:04:05:06 VLAN 2 recv-port gigabitethernet 0/1 interface gigabitethernet 0/2`

6	View the configuration details by executing the following show command.
	`aos# sh mac-address table static multicast`
	`Static Multicast Table`
	`----------`
	`VLAN : 2`
	`Mac Address : 01:02:03:04:05:06`
	`Receive Port : Gi0/1`
	`Member Ports : Gi0/2`
	`Forbidden Ports :`
	`Status : Permanent`
	`----------`
	`Total Mac Addresses displayed: 1`

Configuring VLAN Learning Mode and Type

By default, the VLAN learning mode is IVL (Independent VLAN Learning).

Execute the following commands to change the default learning mode to hybrid.

Step	Action
1	Enter the Global Configuration Mode. `aos# configure terminal`
2	Configure the VLAN Learning Mode as Hybrid. `aos(config)#VLAN learning mode hybrid`

Step	Action
3	Exit from the configuration mode. `aos(config)#end`

4	View the VLAN device information by executing the following command.
	`aos# sh VLAN device info`
	`VLAN device configurations`
	`---------- `
	`VLAN Status : Enabled`
	`VLAN Oper status : Enabled`
	`Gvrp status : Disabled`
	`Gmrp status : Disabled`
	`Gvrp Oper status : Disabled`
	`Gmrp Oper status : Disabled`
	`Mac-VLAN Status : Disabled`
	`Protocol-VLAN Status : Enabled`
	`Bridge Mode : Customer Bridge`
	`Traffic Classes : Enabled`
	`VLAN Operational Learning Mode : Hybrid`
	`Version number : 1VL`
	`Max VLAN id : 4096`
	`Max supported VLANs : 250`
	`Global MAC learning status: Enabled`
	`Filtering utility criteria: Enabled`
	`Unicast MAC learning limit: 8000`

5	`aos# show fid detail`
	`Default Learning Type : IVL`
	`Fid VLAN mapping information`
	`----------`
	`Fid : 1`
	`VLANs : 1,`
	`----------`
	`Fid : 2`
	`VLANs : 2,`
	`----------`
	`Fid : 3`
	`VLANs : 3,`
	`----------`
	`Fid : 4`
	`VLANs : 4,`
	`----------`
	`Fid : 5`
	`VLANs : 5,`
	`----------`
	`Fid : 6`
	`VLANs : 6,`
	`----------`
	`--------`
	`--------`
	`--------`
	`--------`
	`----------`
	`Fid : 4094`
	`VLANs : 4094`
	`----------`

6	Execute the following command to configure the learning type. `aos(config)# VLAN learning mode svl`
7	Exit from the configuration mode. `aos(config)# end`

Configuring Dynamic VLAN Learning

Please note the following before configuring dynamic VLAN learning.

- By default, GVRP is enabled globally, and can be enabled/disabled on a per-port basis.
- If GVRP is disabled globally in the switch, then use the CLI command **set gvrp enable** in the Global Configuration Mode to enable GVRP globally or use the **set port gvrp interface interface id enable** command to enable GVRP on an interface in the Global Configuration Mode.
- If GVRP is disabled globally or on a particular port, then dynamic VLAN learning will not take place globally or on that port.
- By default, all ports in a switch are created (but only port 1 is up) and added as member ports of default VLAN 1.
- In Switch A P1 is configured to be a member port of VLAN 2.

Procedure

Execute the following commands in Switch A.

Step	Action
1	Enter the Global Configuration Mode. `aos# configure terminal`

2	Enter the Interface Configuration Mode for interface 2 and make the interface up.
	`aos(config)#interface gigabitethernet 0/2`
	`aos(config-if)#no shutdown`

3	Exit from the Interface Configuration Mode. `aos(config-if)#exit`
4	Configure VLAN 2 in the switch. `aos(config)#VLAN 2`
5	Configure VLAN 2 as static VLAN with the required type of ports. `aos(config-VLAN)#ports gigabitethernet 0/1 untagged gigabitethernet 0/1`
6	Exit from the Interface Configuration Mode. `aos(config-VLAN)# end`

7	View the VLAN information by executing the following show command.
	`aos# show VLAN`
	The output in switch A is,
	`VLAN database`
	`----------`
	`VLAN ID : 1`
	`Member Ports : Gi0/1, Gi0/2, Gi0/3, Gi0/4, Gi0/5, Gi0/6`
	`Gi0/7, Gi0/8, Gi0/9, Gi0/10, Gi0/11, Gi0/12`
	`Gi0/13, Gi0/14, Gi0/15, Gi0/16, Gi0/17, Gi0/18`
	`Gi0/19, Gi0/20, Gi0/21, Gi0/22, Gi0/23, Gi0/24`
	`Untagged Ports : Gi0/1, Gi0/2, Gi0/3, Gi0/4, Gi0/5, Gi0/6`
	`Gi0/7, Gi0/8, Gi0/9, Gi0/10, Gi0/11, Gi0/12`
	`Gi0/13, Gi0/14, Gi0/15, Gi0/16, Gi0/17, Gi0/18`
	`Gi0/19, Gi0/20, Gi0/21, Gi0/22, Gi0/23, Gi0/24`
	`Forbidden Ports : None`
	`Name :`
	`Status : Permanent`
	`----------`
	`VLAN ID : 2`
	`Member Ports : Gi0/1`
	`Untagged Ports : Gi0/1`
	`Forbidden Ports : None`
	`Name :`
	`Status : Permanent`
	`----------`
	The output in switch B is,
	`VLAN database`

Step	Action
	``` ------------- VLAN ID : 1 Member Ports : Gi0/1, Gi0/2, Gi0/3, Gi0/4, Gi0/5, Gi0/6 Gi0/7, Gi0/8, Gi0/9, Gi0/10, Gi0/11, Gi0/12 Gi0/13, Gi0/14, Gi0/15, Gi0/16, Gi0/17, Gi0/18 Gi0/19, Gi0/20, Gi0/21, Gi0/22, Gi0/23, Gi0/24 Untagged Ports : Gi0/1, Gi0/2, Gi0/3, Gi0/4, Gi0/5, Gi0/6 Gi0/7, Gi0/8, Gi0/9, Gi0/10, Gi0/11, Gi0/12 Gi0/13, Gi0/14, Gi0/15, Gi0/16, Gi0/17, Gi0/18 Gi0/19, Gi0/20, Gi0/21, Gi0/22, Gi0/23, Gi0/24 Forbidden Ports : None Name : Status : Permanent ---------- VLAN ID : 2 Member Ports : Gi0/1 Untagged Ports : None Forbidden Ports : None Name : Status : Dynamic Gvrp ```

Configuring Dynamic Multicast Learning

Note the following before configuring dynamic multicast learning:

- By default, GMRP is enabled globally and can be enabled/disabled on a per-port basis.
- If GMRP is disabled globally in the switch, then use the CLI command **`set gmrp enable`** in the Global Configuration Mode to enable GMRP globally or use the **`set port gmrp interface interface id enable`** command in the Global Configuration Mode.
- If GMRP is disabled on a port or globally, then dynamic multicast learning will not take place globally or on that port.
- By default, all ports in a switch are created (but only port 1 is up) and added as member ports of default VLAN 1.

Procedure

Execute the following commands in Switch A to configure static Multicast MAC address.

Step	Action
1	Enter the Global Configuration Mode. `aos# configure terminal`

2	Enter the Interface Configuration Mode (for interface 2) and make the interface up.
	`aos(config)# interface gigabitethernet 0/2`
	`aos(config-if)# no shutdown`

3	Exit from the Interface Configuration Mode. `aos(config-if)# exit`
4	Configure static Multicast MAC address. `aos(config)# mac-address-table static multicast 01:02:03:04:05:06 VLAN 1 recv-port gigabitethernet 0/1 interface gigabitethernet 0/2`
5	View the MAC-address table details by executing the following show command. ``` aos# show mac-address-table static multicast Static Multicast Table ---------- VLAN : 1 Mac Address : 01:02:03:04:05:06 Receive Port : Gi0/1 Member Ports : Gi0/2 Forbidden Ports : Status : Permanent ---------- ```

Step	Action
	`Total Mac Addresses displayed: 1`

Execute the following commands in switch B.

Step	Action
1	Enter the Global Configuration Mode. `aos# configure terminal`
2	Disable GMRP globally on the device. `aos(config)# set gmrp disable`
3	Return to Privileged EXEC Mode. `aos(config)# end`

4	View the MAC-Address-Table details by executing the following show command.
	`aos# show mac-address-table`
	`VLAN  Mac Address  Type  Ports`
	`----  ----------  ----  -----`
	`1  00:01:02:03:04:02  Learnt  Gi0/1`
	`Total Mac Addresses displayed: 1`

Execute the following commands to enable GMRP globally in switch B.

Step	Action

1	`aos# configure terminal`
	`aos(config)# set gmrp enable`
	`aos# show mac-address-table`
	`VLAN  Mac Address  Type  Ports`
	`----  ----------  ----  -----`
	`1  00:01:02:03:04:02  Learnt  Gi0/1`
	`1  01:02:03:04:05:06  Learnt  Gi0/1`
	`Total Mac Addresses displayed: 2`

Configuring Restricted VLAN Registration

Note the following before configuring restricted VLAN registration:

- By default, restricted VLAN registration is disabled on a port. If restricted VLAN registration is enabled on a port, then VLAN is learned dynamically on that port, only if the specific VLAN is statically configured in the switch.
- If restricted VLAN registration rules are disabled, then GVRP packets are processed normally and VLANs are learned dynamically even if they are not statically configured in the switch.
- In Switch A, P1 is configured to be member port of VLANs 2 and 3.

Procedure

View the VLAN information before configuring restricted VLAN registration.

Step	Action

1	The Output in switch A is:
	`aos# show VLAN`
	`VLAN database`
	`----------`
	`VLAN ID  : 1`
	`Member Ports  : Gi0/1, Gi0/2, Gi0/3, Gi0/4, Gi0/5, Gi0/6`
	`Gi0/7, Gi0/8, Gi0/9, Gi0/10, Gi0/11, Gi0/12`
	`Gi0/13, Gi0/14, Gi0/15, Gi0/16, Gi0/17, Gi0/18`
	`Gi0/19, Gi0/20, Gi0/21, Gi0/22, Gi0/23, Gi0/24`
	`Untagged Ports  : Gi0/1, Gi0/2, Gi0/3, Gi0/4, Gi0/5, Gi0/6`
	`Gi0/7, Gi0/8, Gi0/9, Gi0/10, Gi0/11, Gi0/12`
	`Gi0/13, Gi0/14, Gi0/15, Gi0/16, Gi0/17, Gi0/18`
	`Gi0/19, Gi0/20, Gi0/21, Gi0/22, Gi0/23, Gi0/24`
	`Forbidden Ports  : None`

Step	Action

	`Name : `
	`Status : Permanent`
	`----------`
	`VLAN ID : 2`
	`Member Ports : Gi0/1`
	`Untagged Ports : Gi0/1`
	`Forbidden Ports : None`
	`Name : `
	`Status : Permanent`
	`----------`
	`VLAN ID : 3`
	`Member Ports : Gi0/1`
	`Untagged Ports : Gi0/1`
	`Forbidden Ports : None`
	`Name : `
	`Status : Permanent`
	`----------`

2	The output in switch B is:
	`aos# show VLAN`
	`VLAN database`
	`----------`
	`VLAN ID : 1`
	`Member Ports : Gi0/1, Gi0/2, Gi0/3, Gi0/4, Gi0/5, Gi0/6`
	`Gi0/7, Gi0/8, Gi0/9, Gi0/10, Gi0/11, Gi0/12`
	`Gi0/13, Gi0/14, Gi0/15, Gi0/16, Gi0/17, Gi0/18`
	`Gi0/19, Gi0/20, Gi0/21, Gi0/22, Gi0/23, Gi0/24`
	`Untagged Ports : Gi0/1, Gi0/2, Gi0/3, Gi0/4, Gi0/5, Gi0/6`
	`Gi0/7, Gi0/8, Gi0/9, Gi0/10, Gi0/11, Gi0/12`
	`Gi0/13, Gi0/14, Gi0/15, Gi0/16, Gi0/17, Gi0/18`
	`Gi0/19, Gi0/20, Gi0/21, Gi0/22, Gi0/23, Gi0/24`
	`Forbidden Ports : None`
	`Name : `
	`Status : Permanent`
	`----------`
	`VLAN ID : 2`
	`Member Ports : Gi0/1`
	`Untagged Ports : None`
	`Forbidden Ports : None`
	`Name : `
	`Status : Dynamic Gvrp`
	`----------`
	
	`VLAN ID : 3`
	`Member Ports : Gi0/1`
	`Untagged Ports : None`
	`Forbidden Ports : None`
	`Name : `
	`Status : Dynamic Gvrp`
	`----------`

Execute the following commands in Switch B to enable restricted VLAN registration.

Step	Action
1	Enter the Global Configuration Mode. `aos# configure terminal`

2	Enable Restricted VLAN registration on a port.
	`aos(config)# interface gigabitethernet 0/1`
	`aos(config-if)# VLAN restricted enable`

Step	Action

3	View the configuration details after enabling VLAN registration.
	`aos# show VLAN`
	`VLAN database`
	`----------`
	`VLAN ID : 1`
	`Member Ports : Gi0/1, Gi0/2, Gi0/3, Gi0/4, Gi0/5, Gi0/6`
	`Gi0/7, Gi0/8, Gi0/9, Gi0/10, Gi0/11, Gi0/12`
	`Gi0/13, Gi0/14, Gi0/15, Gi0/16, Gi0/17, Gi0/18`
	`Gi0/19, Gi0/20, Gi0/21, Gi0/22, Gi0/23, Gi0/24`
	`Untagged Ports : Gi0/1, Gi0/2, Gi0/3, Gi0/4, Gi0/5, Gi0/6`
	`Gi0/7, Gi0/8, Gi0/9, Gi0/10, Gi0/11, Gi0/12`
	`Gi0/13, Gi0/14, Gi0/15, Gi0/16, Gi0/17, Gi0/18`
	`Gi0/19, Gi0/20, Gi0/21, Gi0/22, Gi0/23, Gi0/24`
	`Forbidden Ports : None`
	`Name :`
	`Status : Permanent`
	`----------`

4	Create VLAN 2 in switch B.
	`aos# configure terminal`
	`aos(config)# VLAN 2`
	`aos(config-VLAN)# ports gigabitethernet 0/2`

5	View the configuration details after VLAN 2 creation.
	`aos# show VLAN`
	`VLAN database`
	`----------`
	`VLAN ID : 1`
	`Member Ports : Gi0/1, Gi0/2, Gi0/3, Gi0/4, Gi0/5, Gi0/6`
	`Gi0/7, Gi0/8, Gi0/9, Gi0/10, Gi0/11, Gi0/12`
	`Gi0/13, Gi0/14, Gi0/15, Gi0/16, Gi0/17, Gi0/18`
	`Gi0/19, Gi0/20, Gi0/21, Gi0/22, Gi0/23, Gi0/24`
	`Untagged Ports : Gi0/1, Gi0/2, Gi0/3, Gi0/4, Gi0/5, Gi0/6`
	`Gi0/7, Gi0/8, Gi0/9, Gi0/10, Gi0/11, Gi0/12`
	`Gi0/13, Gi0/14, Gi0/15, Gi0/16, Gi0/17, Gi0/18`
	`Gi0/19, Gi0/20, Gi0/21, Gi0/22, Gi0/23, Gi0/24`
	`Forbidden Ports : None`
	`Name :`
	`Status : Permanent`
	`----------`
	`VLAN ID : 2`
	`Member Ports : Gi0/1, Gi0/2`
	`Untagged Ports : None`
	`Forbidden Ports : None`
	`Name :`
	`Status : Permanent`
	Note: Because VLAN 2 is statically configured in switch B, VLAN 2 is learned dynamically on port 1 of switch B, even though restricted VLAN registration is enabled.

Configuring Restricted Group Registration

Before configuring restricted group registration, note the following:

- By default, port level restricted group registration is disabled. If this feature is enabled, then multicast group attribute/service requirement attribute is only learned dynamically on a port if the specific multicast group attribute/service requirement attribute is statically configured in the switch.
- If restricted group registration rules are disabled, then the GMRP packets are processed normally and the multicast group attribute/service requirement attributes are learned dynamically, even if they are not statically configured in the switch.

Procedure

Execute the following commands in switch A to configure static multicast MAC Address.

Step	Action
1	Enter the Global Configuration Mode. `aos#configure terminal`
2	Configure static multicast entry with the required ports. `aos(config)# mac-address-table static multicast 01:02:03:04:05:06 VLAN 1 recv-port gigabitethernet 0/1 interface gigabitethernet 0/2`

3	View the Static Multicast Table by executing the following show command.
	`aos# show mac-address table static multicast`
	`Static Multicast Table`
	`----------`
	`VLAN : 1`
	`Mac Address : 01:02:03:04:05:06`
	`Receive Port : Gi0/1`
	`Member Ports : Gi0/2`
	`Forbidden Ports :`
	`Status : Permanent`
	`----------`

4	View the statically configured multicast entry by executing the following show command. The output in switch A is:
	`aos# show mac-address-table`
	`VLAN Mac Address Type Ports`
	`---- ---------- ---- -----`
	`1 00:02:02:03:04:01 Learnt Gi0/2 (Switch B port 1 mac address)`
	`1 01:02:03:04:05:06 Static Gi0/2`
	`Total Mac Addresses displayed: 2`
	The output in Switch B is,
	`aos# show mac-address-table`
	`VLAN Mac Address Type Ports`
	`---- ---------- ---- -----`
	`1 00:01:02:03:04:02 Learnt Gi0/1 (In switch A port 2 mac address)`
	`1 01:02:03:04:05:06 Learnt Gi0/1 (group mac address configured In switch A)`
	`Total Mac Addresses displayed: 2`

Execute the following commands to enable restricted group registration in Switch B.

Step	Action
1	Enter the Global Configuration Mode. `aos# configure terminal`

2	Enable restricted group registration on a port.
	`aos(config)# interface gigabitethernet 0/1`
	`aos(config-if)# group restricted enable`
	`aos(config-if)#end`

3	View the configuration details after enabling restricted group registration.
	`aos# show mac-address-table`
	`VLAN Mac Address Type Ports`
	`---- ---------- ---- -----`
	`1 00:01:02:03:04:02 Learnt Gi0/1`
	`Total Mac Addresses displayed: 1`

Create static multicast MAC address by executing the following commands.

Step	Action
1	Enter the Global Configuration Mode. `aos# configure terminal`

Step	Action
2	Configure static multicast entry with the required ports. `aos(config)# mac-address-table static multicast 01:02:03:04:05:06 VLAN 1 recv-port gigabitethernet 0/1 interface gigabitethernet 0/2`
3	Exit from the Global Configuration Mode. `aos(config)#end`

4	View the MAC Address Table details by executing the following show command.
	`aos# show mac-address-table`
	`VLAN  Mac Address  Type  Ports`
	`----  ----------  ----  -----`
	`1  00:01:02:03:04:02  Learnt  Gi0/1`
	`1  01:02:03:04:05:06  Static  Gi0/1,Gi0/2`
	`Total Mac Addresses displayed: 2`
	Note: Because the group-mac address 01:02:03:04:05:06 is statically configured in switch B, it is learned dynamically on port 1 of switch B, even though restricted group registration is enabled.

Changing the Forwarding Mode

The following sections describe the configuration of Forwarding Mode for a VLAN.

Forward-all

The forward-all information for a VLAN specifies the set of ports on that VLAN to which all multicast packets must be forwarded.

Procedure

Execute the following commands to configure a set of ports as forward-all.

Step	Action
1	Enter the Global Configuration Mode. `aos# configure terminal`
2	Enter the VLAN Configuration mode (for VLAN 4). `aos(config)# VLAN 4`
3	Configure member ports for VLAN 4. `aos(config-VLAN)#port gigabitethernet 0/2-4`
4	Configure the forward-all information for the member ports of VLAN 4. `aos(config-VLAN)# forward-all static-ports gigabitethernet 0/2 forbidden-ports gigabitethernet 0/4`

5	View the configuration information by executing the following show command.
	`aos# show forward-all`
	`VLAN Forward All Table`
	`----------`
	`VLAN ID : 1`
	`ForwardAll Ports  :`
	`ForwardAll Static Ports  :`
	`ForwardAll ForbiddenPorts :`
	`----------`
	`VLAN ID : 4`
	`ForwardAll Ports  : Gi0/2`
	`ForwardAll Static Ports  : Gi0/2`
	`ForwardAll ForbiddenPorts : Gi0/4`
	`----------`
	Note: Forbidden ports are the set of ports in a VLAN, configured by the user over which, the multicast group-addressed frames are not forwarded.

Forward-unregistered

Forward unregistered information for a VLAN specifies the set of ports for that VLAN, which does not have specific forwarding information.

Procedure

Execute the following commands to configure the forward unregistered information for a VLAN.

Step	Action
1	Enter the Global Configuration Mode. `aos# configure terminal`
2	Enter the VLAN Configuration mode (for VLAN 4). `aos(config)# VLAN 4`
3	Configure member ports for VLAN 4. `aos(config-VLAN)#port gigagbitethernet 0/1-4`

4	Configure the forward-unregistered information for VLAN 4.
	`aos(config-VLAN)# forward-unregistered static-ports gigabitethernet 0/1 forbidden-ports gigabitethernet 0/4`
	`aos(config-VLAN)# end`

5	View the configuration information by executing the following command.
	`aos# show forward-unregistered`
	`VLAN Forward Unregistered Table`
	`----------`
	`VLAN ID : 1`
	`Unreg ports : Gi0/1, Gi0/2, Gi0/3, Gi0/4, Gi0/5, Gi0/6`
	`Gi0/7, Gi0/8, Gi0/9, Gi0/10, Gi0/11, Gi0/12`
	`Gi0/13, Gi0/14, Gi0/15, Gi0/16, Gi0/17, Gi0/18`
	`Gi0/19, Gi0/20, Gi0/21, Gi0/22, Gi0/23, Gi0/24`
	`Unreg Static Ports : Gi0/1, Gi0/2, Gi0/3, Gi0/4, Gi0/5, Gi0/6`
	`Gi0/7, Gi0/8, Gi0/9, Gi0/10, Gi0/11, Gi0/12`
	`Gi0/13, Gi0/14, Gi0/15, Gi0/16, Gi0/17, Gi0/18`
	`Gi0/19, Gi0/20, Gi0/21, Gi0/22, Gi0/23, Gi0/24`
	`Unreg Forbidden Ports :`
	`----------`
	`VLAN ID : 4`
	`Unreg ports : Gi0/1`
	`Unreg Static Ports : Gi0/1`
	`Unreg Forbidden Ports : Gi0/4`
	`----------`

Classifying Frames to a VLAN

As per the IEEE standards, there are rules for classifying the frames in a VLAN. VLAN classification is accomplished by associating a VLAN ID with each port on the switch. Optionally, frames can be classified according to the protocol identifier contained within the frame.

Frame classification priority begins with VLAN Tag; followed by MAC based, protocol match, and finally the PVID.

Port-based classification

In port-based classification, the VLAN ID associated with an untagged or priority-tagged frame is determined, based on the port on which the frame arrives. Port-based classification requires the association of a specific VLAN ID, the port VLAN identifier (PVID) with each port.

Note: A port can be a member of only one port-based VLAN.

Note: If PVID value has not been explicitly configured for a port, then PVID assumes a default value of 1.

Procedure

Execute the following commands to configure the PVID that is assigned to untagged/priority-tagged frames.

Step	Action
1	Enter the Global Configuration Mode. `aos# configure terminal`
2	Enter the Interface Configuration Mode for port gigabitethernet 0/5. `aos(config)# interface gigabitethernet 0/5`
3	Configure the PVID that is to be assigned to untagged/priority-tagged frames. `aos(config-if)# switchport pvid`

4	View the configuration details by executing the following show command.
	`aos# show VLAN port config port gigabitethernet 0/5`
	`VLAN Port configuration table`
	`------------------------------`
	`Port Gi0/5`
	
	`Port VLAN ID : 4`
	`Port Acceptable Frame Type : Admit All`
	`Port Ingress Filtering : Disabled`
	`Port Mode : Hybrid`
	`Port Gvrp Status : Enabled`
	`Port Gmrp Status : Enabled`
	`Port Gvrp Failed Registrations : 0`
	`Gvrp last pdu origin : 00:00:00:00:00:00`
	`Port Restricted VLAN Registration : Disabled`
	`Port Restricted Group Registration : Disabled`
	`Mac Based Support : Disabled`
	`Port-and-Protocol Based Support : Enabled`
	`Default Priority : 0`
	`--------------------------------------------------`

Port and protocol based classification

All untagged and priority-tagged frames received by a port are classified as belonging to a VLAN, the VID (the PVID) of which is associated with the Port-protocol group/higher layer protocol for the port.

Procedure

Execute the following commands to configure protocol-based VLAN classification.

Step	Action
1	Enter the Global Configuration Mode. `aos# configure terminal`
2	Configure the group ID for a specific encapsulation and protocol value combination. `aos(config)# map protocol ip enet-v2 protocols-group 10` This command adds IP protocol and frame of type Enet-V2 to protocol group 10.

3	View the configuration details by executing the following show command.
	`aos# show VLAN protocols-group`
	`Protocol Group Table`
	`--------------------`
	`-----------------------------------------`
	`Frame Type Protocol Group`
	`-----------------------------------------`
	`Enet-v2 IP 10`
	`-----------------------------------------`

Step	Action

4	Map the protocol group configured to a particular VLAN identifier and to the specified interface.
	`aos(config)# interface gigabitethernet 0/7`
	`aos(config-if)# switchport map protocols-group 10 VLAN 4`
	Note: The above configuration classifies the IP packets received on the interface gigabitethernet 0/ 7 to VLAN 4.
	`aos# show protocol-VLAN`
	`Port Protocol Table`
	`----------`
	`Port  Group  VLAN ID`
	`----------`
	`Gi0/7  10  4`
	`----------`

MAC based classification

In MAC based classification, a set of MAC addresses is formed to define a VLAN. Classification of the VLAN ID of the received packet is done based on the source address of the packet.

Procedure

Execute the following commands to enable MAC based classification for all the available interfaces of VLAN.

Step	Action
1	Enter the Global Configuration Mode. `aos# configure terminal`
2	Enable MAC-based VLAN for all the available interfaces of the VLAN. `aos(config)# mac-VLAN`

3	View the configuration details by executing the following show command.
	`aos# show VLAN device info`
	`VLAN device configurations`
	`----------`
	
	`VLAN Status : Enabled`
	`VLAN Oper status : Enabled`
	`Gvrp status : Enabled`
	`Gmrp status : Enabled`
	`Gvrp Oper status : Enabled`
	`Gmrp Oper status : Enabled`
	`Mac-VLAN Status : Enabled`
	`Protocol-VLAN Status : Enabled`
	`Bridge Mode : Customer Bridge`
	`Traffic Classes : Enabled`
	`VLAN Operational Learning Mode : IVL`
	`Version number : 1`
	`Max VLAN id : 4094`
	`Max supported VLANs : 1024`

Execute the following commands to enable MAC-based VLAN learning on a port.

Step	Action
1	Enter the Global Configuration Mode. `aos# configure terminal`
2	Enter the Interface Configuration Mode for port gigabitethernet 0/2. `aos(config)# interface gigabitethernet 0/2`
3	Enable MAC based VLAN for the port gigabitethernet 0/2. `aos(config-if)# port mac-VLAN`

Step	Action
4	Exit from the configuration mode. `aos(config-if)# end`

5	View the configuration details by executing the following show command.
	`aos# show VLAN port config port gigabitethernet 0/2`
	`VLAN Port configuration table`
	`------------------------------`
	
	`Port Gi0/2`
	`Port VLAN ID : 1`
	`Port Acceptable Frame Type : Admit All`
	`Port Ingress Filtering : Disabled`
	`Port Mode : Hybrid`
	`Port Gvrp Status : Enabled`
	`Port Gmrp Status : Enabled`
	`Port Gvrp Failed Registrations : 0`
	`Gvrp last pdu origin : 00:00:00:00:00:00`
	`Port Restricted VLAN Registration : Disabled`
	`Port Restricted Group Registration : Disabled`
	`Mac Based Support : Enabled`
	`Port-and-Protocol Based Support : Enabled`
	`Default Priority : 0`
	`--------------------------------------------------`

6	Configure the VLAN-MAC address mapping. `aos(config)# mac-map 00:11:22:33:44:55 VLAN 1`

7	View the configuration details by executing the following show command.
	`aos# show mac-VLAN`
	`Mac Map Table`
	`--------------`
	`Mac Address VLAN ID`
	`----------- -------`
	`00:11:22:33:44:55 1`
	The above configuration enables packets from the source 00:11:22:33:44:55 to be classified to VLAN 1.

Enabling Tunneling on a Port

Before enabling tunneling on a port, note the following:

- Bridge mode must be set to ‘provider’ for dot1q-tunneling status to be enabled on an interface.
- Before configuring the bridge mode, spanning tree and GARP must be shutdown.
- The bridge mode of Provider is not supported.
- This feature is available only if you have a Carrier Ethernet (QINQ) feature license. Contact Aviat Customer Support if you do not have this and require it.

Procedure

Execute the following commands to shutdown GARP and spanning tree.

Step	Action

1	`aos(config)# set gvrp disable`
	`aos(config)# set gmrp disable`
	`aos(config)# shutdown garp`
	`aos(config)# shutdown spanning-tree`

2	Configure the bridge mode of the Switch. `aos(config)# bridge-mode provider`

Step	Action

3	Enable GARP and spanning tree.
	`aos(config)# no shutdown garp`
	`aos(config)# set gvrp enable`
	`aos(config)# set gmrp enable`
	`aos(config)# spanning-tree mode mst`
	`aos# show VLAN device info`
	`VLAN device configurations`
	`----------`
	`VLAN Status : Enabled`
	`VLAN Oper status : Enabled`
	`Gvrp status : Enabled`
	`Gmrp status : Enabled`
	`Gvrp Oper status : Enabled`
	`Gmrp Oper status : Enabled`
	`Mac-VLAN Status : Disabled`
	`Protocol-VLAN Status : Enabled`
	`Bridge Mode : Provider Bridge`
	`Traffic Classes : Enabled`
	`VLAN Operational Learning Mode : IVL`
	`Version number : 1`
	`Max VLAN id : 4094`
	`Max supported VLANs : 1024`

To enable dot1q-tunneling on a specified port:

- Port acceptable frame-type must be untaggedAndPrioritytagged
- Port must be configured in access mode
- GVRP, GMRP, STP must be disabled on that port.

Step	Action
1	Execute the following command to disable GVRP on a port. `aos(config)# set port gvrp gigabitethernet 0/1 disable`

2	Execute the following command to disable GMRP on a port.
	`aos(config)# set port gmrp gigabitethernet 0/1 disable`
	`aos(config)# interface gigabitethernet 0/1`

3	Configure the Switch port acceptable frame-type as untaggedAndPrioritytagged. `aos(config-if)# switchport acceptable-frame-type untaggedAndPrioritytagged`
4	Configure the Switch port mode as access. `aos(config-if)# switchport mode access`
5	Execute the following command to disable STP on a port. `aos(config-if)# spanning-tree disable`
6	Enable Dot1q-tunneling on a specified interface. `aos(config-if)# switchport mode Dot1q-tunnel`

7	View the configuration details by executing the following show command.
	`aos# show VLAN port config port gigabitethernet 0/1`
	`VLAN Port configuration table`
	`----------`
	`Port Gi0/1`
	`Port VLAN ID : 1`
	`Port Acceptable Frame Type : Admit Only Untagged and Priority tagged`
	`Port Ingress Filtering : Disabled`
	`Port Mode : Access`
	`Port Gvrp Status : Disabled`
	`Port Gmrp Status : Enabled`
	`Port Gvrp Failed Registrations : 0`
	`Gvrp last pdu origin : 00:00:00:00:00:00`
	`Port Restricted VLAN Registration : Disabled`
	`Port Restricted Group Registration : Disabled`
	`Mac Based Support : Disabled`
	`Port-and-Protocol Based Support : Enabled`
	`Default Priority : 0`

Step	Action
	```---------- ```
8	```aos# show Dot1q-tunnel interface gigabitethernet 0/1 Interface --------- Gi0/1 ```

Tunneling of STP packets

BPDU tunneling can be enabled on a port if Dot1q tunneling is enabled on that port.

Note: The bridge mode of Provider is not supported.

Procedure

Execute the following commands to enable tunneling of STP BPDUs.

Step	Action
1	Enter the Global Configuration Mode. ```aos# configure terminal ```
2	Configure the VLAN port mode. ```aos(config-if)# switchport mode access ```
3	Enable Dot1q-tunneling on the specified interface. ```aos(config-if)# switchport mode Dot1q-tunnel ```
4	Disable spanning tree on the specified interface. ```aos(config-if)#spanning-tree disable ```
5	Enable tunneling of STP BPDUs on the interface. ```aos(config-if)# l2protocol-tunnel stp ```
6	View the configuration details by executing the following show command. ```aos# show l2protocol-tunnel COS for Encapsulated STP Packet : 7 Port Protocol Encapsulation Counter Decapsulation Counter ---- -------- ---------- ---------- Gi0/1 stp 0 0 Gi0/1 gvrp 0 0 ```

Configuring Port Filtering

Configuring acceptable frame type

It is possible to configure the acceptable frame type for the port as one of the following:

- All frames
- Tagged frames
- Untagged and priority tagged frames.

Procedure

Execute the following commands to configure the acceptable frame type for the port.

Step	Action
1	Enter the Global Configuration Mode. ```aos# configure terminal ```
2	Enter the Interface Configuration Mode and configure the frame type of the port as “tagged” for that interface. ```aos(config)# interface gigabitethernet 0/2 aos(config-if)# switchport acceptable-frame-type tagged ```

Step	Action

3	View the configuration information by executing the following show command.
	`aos# show VLAN port config port gigabitethernet 0/2`
	`VLAN Port configuration table`
	`----------`
	`Port Gi0/2`
	`Port VLAN ID : 1`
	`Port Acceptable Frame Type : Admit Only VLAN Tagged`
	`Port Ingress Filtering : Disabled`
	`Port Mode : Hybrid`
	`Port Gvrp Status : Enabled`
	`Port Gmrp Status : Enabled`
	`Port Gvrp Failed Registrations : 0`
	`Gvrp last pdu origin : 00:00:00:00:00:00`
	`Port Restricted VLAN Registration : Disabled`
	`Port Restricted Group Registration : Disabled`
	`Mac Based Support : Disabled`
	`Port-and-Protocol Based Support : Enabled`
	`Default Priority : 0`
	`----------`
	Note: When set to “tagged”, the device will discard untagged and priority tagged frames received on the port and will process only the VLAN tagged frames.

Configuring ingress filtering

Enabling Ingress Filtering on a port does not allow frames for a VLAN from a port that is not the member port of that particular VLAN.

Procedure

Execute the following commands to enable ingress filtering on a port.

Step	Action
1	Enter the Global Configuration Mode. `aos# configure terminal`

2	Enter the Interface Configuration Mode and enable ingress filtering for that interface.
	`aos(config)# interface gigabitethernet 0/1`
	`aos(config-if)# switchport ingress-filter`

3	View the configuration details by executing the following show command.
	`aos# show VLAN port config port gigabitethernet 0/1`
	`VLAN Port configuration table`
	`----------`
	`Port Gi0/1`
	`Port VLAN ID : 1`
	`Port Acceptable Frame Type : Admit All`
	`Port Ingress Filtering : Enabled`
	`Port Mode : Hybrid`
	`Port Gvrp Status : Enabled`
	`Port Gmrp Status : Enabled`
	`Port Gvrp Failed Registrations : 0`
	`Gvrp last pdu origin : 00:00:00:00:00:00`
	`Port Restricted VLAN Registration : Disabled`
	`Port Restricted Group Registration : Disabled`
	`Mac Based Support : Disabled`
	`Port-and-Protocol Based Support : Enabled`
	`Default Priority : 0`
	`----------`

Configuring filtering utility criteria

Filtering Utility Criteria can be configured as Default or Enhanced. By default, the Filtering Utility criteria will be selected as Default.

Procedure

Execute the following commands to change filtering utility criteria on a port.

Step	Action
1	Enter the Global Configuration Mode. `aos# configure terminal`

2	Enter the Interface Configuration Mode and change filtering utility criteria for that interface.
	`aos(config)# interface gigabitethernet 0/1`
	`aos(config-if)# switchport filtering-utility-criteria enhanced`

3	View the configuration details by executing the following show command.
	`aos# show vlan port config port gigabitethernet 0/1`
	`Vlan Port configuration table`
	`---------- `
	`Port Gi0/1`
	`Port Vlan ID : 1`
	`Port Acceptable Frame Type : Admit All`
	`Port Ingress Filtering : Disabled`
	`Port Mode : Hybrid`
	`Port Gvrp Status : Enabled`
	`Port Gmrp Status : Enabled`
	`Port Gvrp Failed Registrations : 0`
	`Gvrp last pdu origin : 00:00:00:00:00:00`
	`Port Restricted Vlan Registration : Disabled`
	`Port Restricted Group Registration : Disabled`
	`Mac Based Support : Disabled`
	`Port-and-Protocol Based Support : Enabled`
	`Default Priority : 0`
	`Tunnel Status : Disabled`
	`Dot1x Protocol Tunnel Status : Peer`
	`LACP Protocol Tunnel Status : Peer`
	`Spanning Tree Tunnel Status : Peer`
	`GVRP Protocol Tunnel Status : Peer`
	`GMRP Protocol Tunnel Status : Peer`
	`IGMP Protocol Tunnel Status : Peer`
	`Filtering Utility Criteria : Enhanced`
	`Port Protected Status : Disabled`
	`----------`

Configuring WildCard Entry

If WildCard entry is present and there is no static entry configured in the switch for received destination MAC address and VLAN, then frames will be forwarded on wildcard egress ports.

Procedure

Execute the following commands in switch A to configure static multicast MAC Address.

Step	Action
1	Enter the Global Configuration Mode. `aos#configure terminal`
2	Configure wildcard entry with the required egress ports. `aos(config)# wildcard mac-address 00:01:02:03:04:05 interface gigabitethernet 0/1`

3	View the configured WildCard entry by executing the following show command.
	`aos# show wildcard mac-address 00:01:02:03:04:05`
	`Wild Card Entries:`
	`---------- `
	`Mac Address Ports`
	`---------- ----------`
	`00:01:02:03:04:05 Gi0/1`

Chapter 3. Bridge Mode Configuration

Note: See **Default Configurations** (on page 22) for a list of supported Bridge Modes.

The Provider Bridging feature of VLAN Module in CTR 8540 enables a service provider to offer an equivalent of separate VLANs to a number of separate customers. Transparent communication between different customer networks at different locations through the provider networks is achieved through the Provider Bridges.

Layer2 stacks act as a Customer Bridge or Provider Bridge. An Administrator chooses the type of bridge during the system initialization or when the system is running.

In this chapter

Configuring Bridge Mode during System Initialization 43
Configuring Bridge Mode during System Runtime 44

Configuring Bridge Mode during System Initialization

During system initialization, CTR 8540 takes the value of bridge mode from aosnvram.txt. The Administrator configures the type of bridge in aosnvram.txt.

The values of bridge mode in aosnvram.txt are as follows. They are provided here as a reference only: they are not visible to front-end users.

Table 5: TBridge Mode values in aosnvram.txt

Bridge Mode	Value in aosnvram.txt
Customer Bridge	1
Provider Bridge (q-in-q Bridge)	2
Provider Edge Bridge	3
Provider Core Bridge	4

Note: In this document, the term Dot1ad Bridges refers to Provider Edge Bridge and Provider Core Bridge. The term Q-in-Q Bridges refers to Provider Bridge.

- IP_ADDRESS =10.0.0.1
- IP_MASK =255.0.0.0
- INTERFACE =Slot0/1
- MGMT_PORT =NO
- RM_INTERFACE =NONE
- PIM_MODE =2
- BRIDGE_MODE =3
- SNOOP_FORWARD_MODE =2
- SAVE_FLAG =1
- RES_FLAG =0
- RES_OPTION =1
- RES_FILE_NAME =iss.conf
- CONSOLE_CLI =1

Configuring Bridge Mode during System Runtime

The Bridge mode is also configured at runtime. Follow this procedure when Bridge mode is changed during runtime.

Procedure

- Spanning Tree must be in shut down state.
- GARP Module must be in shut down state. GVRP and GMRP protocols must be in disabled state.
- Ethernet CFM has to be stopped.

Step	Action

1	Use these commands to stop Ethernet CFM.
	`configure terminal`
	`!`
	`shutdown spanning-tree`
	`set gvrp disable`
	`set gmrp disable`
	`shutdown garp`
	`no ethernet cfm start`
	`bridge-mode provider-edge`
	`!`
	`end`

2	After changing the bridge mode, the above modules (STP, GARP) are started. Enter the Global Configuration mode. `aos#configure terminal`
3	Shutdown Spanning tree. `aos(config)# shutdown spanning-tree`
4	Disable the GVRP module. `aos(config)# set gvrp disable`
5	Disable the GMRP module. `aos(config)# set gmrp disable`
6	Shutdown the GARP module. `aos(config)# shutdown garp`

7	Change the bridge mode to provider-core bridge.
	`aos(config)# bridge-mode provider-core`
	`aos(config)# end`

8	View the current bridge mode of the switch by executing the following command.
	`aos# show vlan device info`
	`Vlan device configurations`
	`----------`
	`Vlan Status : Enabled`
	`Vlan Oper status : Enabled`
	`Gvrp status : disabled`
	`Gmrp status : disabled`
	`Gvrp Oper status : disabled`
	`Gmrp Oper status : disabled`
	`Mac-Vlan Status : Disabled`
	`Protocol-Vlan Status : Enabled`
	`Bridge Mode : Provider Core Bridge`
	`Traffic Classes : Enabled`
	`Vlan Operational Learning Mode : IVL`
	`Version number : 1`
	`Max Vlan id : 4094`
	`Max supported vlans : 1024`

Chapter 4. Provider Bridge Configurations

The aim of IEEE 802.1ad Provider Bridges is to leverage Ethernet in Ethernet Networks. It also enables a service provider to provide multiple services on a single port using the architecture and protocols of IEEE 802.1Q.

As per the standard, bridges are classified into VLAN Bridge (Customer Bridge or C-VLAN Bridge), S-VLAN Bridge (Provider Core Bridge) and Provider Edge Bridge.

A provider edge bridge is logically subdivided into the following components:

- S-VLAN component.
- C-VLAN component.

In this chapter

Configuring Provider Bridge Port Types 45
Configuring C-VLAN Component 46
C-VLAN Component Spanning Tree Configurations 49
Configuring S-VLAN Component 50
Configuring a Flow for 802.1ad Bridge Port Type 52
Handling Priority in Provider Bridges 53
Configuring VLAN Translation Table 56
Tunneling in Provider Network 57
Protocol Tunneling in Customer Bridges 60
Configuring Port MAC Learning Status and Limit 60
Configuring Static Multicast MAC Limit 61
Configuring Ether Type Swap Table 61
Configuring Customer Port VLAN ID 62
Configuring S-VLAN 63
Configuring Ingress and Egress Ether Type 63
Configuring Proprietary Port Types 65

Configuring Provider Bridge Port Types

In Provider Bridges (Provider Edge Bridge or Provider Core Bridge), a port is configured as one of the following port types:

- Customer Edge Port (Applicable only for Provider Edge Bridge)
- Customer Network Port - Port Based
- Customer Network Port – Stag Based
- Provider Network Port (Default Port Type)
- Proprietary Customer Edge Port
- Proprietary Customer Network Port
- Proprietary Provider Network Port

Note:

- When a port type is changed, all the configurations related to that port are automatically removed.
- Port type is not configured for a port channel, if some ports are aggregated (configured as part for port-channel) in it.

Procedure

Step	Action
1	Enter the Global Configuration mode. `aos#configure terminal`
2	Enter the interface configuration mode. `aos(config)# interface gigabitethernet 0/1`

3	Configure the bridge port type for port 1 as customerNetworkPort (Port-based).
	`aos(config-if)#bridge port-type customerNetworkPort port-based`
	`aos(config-if)#end`

4	View the port type configuration for port 1 by executing the following command.
	`aos#show provider-bridge port config port gigabitethernet 0/1`
	`Provider Bridge Port configuration table`
	`----------`
	`Port Gi0/1`
	`Port Type : Customer Network Port(Port-Based)`
	`Dot1x Protocol Tunnel Status : Peer`
	`LACP Protocol Tunnel Status : Peer`
	`Spanning Tree Tunnel Status : Tunnel`
	`GVRP Protocol Tunnel Status : Tunnel`
	`GMRP Protocol Tunnel Status : Tunnel`
	`IGMP Protocol Tunnel Status : Tunnel`
	`Service Vlan Classification : PVID`
	`Ingress EtherType : 0x88a8`
	`Egress EtherType : 0x88a8`
	`EtherType Swap Status : Disable`
	`Service Vlan Translation Status : Disable`
	`Require Drop Encoding : False`
	`Use_Dei : False`
	`PCP Selection Row : 8P0D`
	`Unicast Mac Learning Status : Enable`
	`Unicast Mac Learning Limit : 150`
	`----------`

Configuring C-VLAN Component

A Provider Edge Bridge is comprised of a single S-VLAN component and zero or many C-VLAN component, whereas Provider Core Bridge is comprised of only one S-VLAN component.

Configuring a port as Customer Edge Port results in creating a C-VLAN component. The VLAN port number of the Customer Edge Port uniquely identifies the C-VLAN component. A C-VLAN component in Provider Edge Bridge is comprised of a single Customer Edge Port and many Provider Edge Ports. An Instance of RSTP runs on every C-VLAN component in the Provider Edge Bridge considering CEP and PEPs as bridge ports.

Provider Edge Port Configurations

Creating a Provider Edge Port

The CVID Registration table provides mapping between a C-VLAN and a S-VLAN. Many C-VLANs are mapped to a single service instance (S-VLAN). Mapping the first C-VLAN to S-VLAN, results in creation of a Provider Edge Port. Provider Edge Ports are logical ports, which are used to establish the connectivity of C-VLAN component to the S-VLAN component.

VLAN Customer Edge Port and S-VLAN ID uniquely identify the Provider Edge Ports.

Note: For more information about Provider Edge Port see section 12.13 and 12.13.3 of IEEE 802.1ad Draft 6.0.

Procedure

Step	Action
1	Enter the Global Configuration mode. `aos#configure terminal`
2	Enter the interface configuration mode. `aos(config)# interface gigabitethernet  0/2`
3	Configure the bridge port type for port 2 as customer Edge Port. `aos(config-if)# bridge port-type customerEdgePort`

4	Configure the CVID Registration table to create a Provider Edge Port for service VLAN 2.
	`aos(config-if)#switchport customer-vlan 5 service-vlan 2 untagged-pep false untagged-cep true`
	`aos(config-if)#end`

5	View the CVID Registration table by executing the following command.
	`aos# sh service vlan cvlan`
	`Switch - default`
	`Service Vlan Classification`
	`---------------------------------`
	`Service Vlan Port  Customer Vlan  Untag-pep  Untag-cep Relay CVlan ID SVLAN Pri Type SVLAN Priority`
	`-----------------------------------------------------`
	`2  Gi0/2  5  false  True 5 None NA`

6	`aos# show provider-bridge pep configuration`
	`Provider Edge Port configuration`
	`-------------------------------------`
	`Switch - default`
	`Port Gi0/2`
	`Service VLAN-ID  : 2`
	`Port VLAN-ID  : 5`
	`Acceptable Frame Type  : Admit all`
	`Ingress Filtering  : Disabled`
	`Default Priority  : 0`
	`COS Preservation  : Disabled`
	`Oper status  : Down`
	`-----------------------------------------------------`

Setting the operational status of Provider Edge Port

For every service instance, a Provider Edge Port is created. VLAN Customer Edge Port ID and S-VLAN ID identify Provider Edge Ports.

Prerequisites

A Provider Edge Port is made operationally up only if the following conditions are met:

- Customer Edge Port of the corresponding C-VLAN component is operationally up.
- S-VLAN corresponding to this Provider Edge Port is active.

Procedure

Execute the following commands.

Step	Action
1	Enter the Global Configuration mode. `aos#configure terminal`
2	Enter the switch configuration mode. `aos(config)# switch default`
3	Enter the VLAN 2 configuration mode. `aos(config-switch)# vlan 2`

4	Configure the VLAN 2 as active.
	`aos(config-switch-vlan)# vlan active`
	`aos(config-switch-vlan)#end`

Step	Action

5	View the operational status of provider edge port by executing the following command.
	`aos# show provider-bridge pep configuration`
	`Provider Edge Port configuration`
	`----------`
	`Switch - default`
	`Port Gi0/2`
	`Service VLAN-ID : 2`
	`Port VLAN-ID : 5`
	`Acceptable Frame Type : Admit all`
	`Ingress Filtering : Disabled`
	`Default Priority : 0`
	`COS Preservation : Disabled`
	`Oper status : Up`
	`----------`

Configuring Provider Edge Port parameters

Even though the Provider Edge Port is a logical port, this port has limited parameters similar to the physical port.

The Provider Edge Port has the following parameters to configure:

- PVID
- Default User Priority
- Acceptable Frame types
- Ingress Filtering

Note: See Provider Edge Port Configuration table [12.13.3.2] in IEE 802.1ad draft 6.0.

The following are the default values of Provider Edge Port Configuration table:

- PVID – PVID for PEP is the first C-VLAN ID mapped to the service instance to which this PEP caters.
- Default User Priority – Zero.
- Ingress Filtering - Disabled.
- Acceptable Frame Types – Admit All.

Procedure

Execute the following commands.

Step	Action
1	Enter the Global Configuration mode. `aos#configure terminal`
2	Enter the interface configuration mode. `aos(config)# interface gigabitethernet 0/2`
3	Configure the PVID for Provider Edge Port as 10. `aos(config-if)# service-vlan 2 pvid 10`
4	Configure the default user priority for Provider Edge Port as 5. `aos(config-if)# service-vlan 2 def-user-priority 5`
5	Enable the Ingress filtering for the Provider Edge Port. `aos(config-if)# service-vlan 2 ingress-filter enable`

6	Configure the acceptable frame type for provider Edge Port as `Admit only Tagged`.
	`aos(config-if)# service-vlan 2 acceptable-frame-type tagged`
	`aos(config-if)#end`

Step	Action

7	View the Provider Edge Port configurations by executing the following command.
	`aos# show provider-bridge pep configuration`
	`Provider Edge Port configuration`
	`----------`
	`Switch - default`
	`Port Gi0/2`
	`Service VLAN-ID : 2`
	`Port VLAN-ID : 10`
	`Acceptable Frame Type : Admit only VLAN Tagged`
	`Ingress Filtering : Enabled`
	`Default Priority : 5`
	`COS Preservation : Disabled`
	`Oper status : Up`
	`----------`

C-VLAN Component Spanning Tree Configurations

An instance of Rapid Spanning tree with changes mentioned in section 13 of IEEE 802.1ad D6.0 runs on a C-VLAN component. When a Port is configured as CEP, the S-VLAN Spanning Tree disables this port VLAN and is active only in C-VLAN Spanning Tree. For the Spanning Tree instance running on the C-VLAN component, the CEP and PEPs of the corresponding C-VLAN component are the bridge ports.

The Spanning Tree running on a C-VLAN component is viewed as:

```
aos# show customer spanning-tree
  Switch default
  Port [Gi0/2]
```

Where the root of the Spanning Tree:

```
Root Id          Priority   65535
                 Address    00:01:02:03:04:02
                 Cost       0
                 Root Ports
                 Hello Time 2 Sec, Max Age 0 Sec, Forward Delay 0 Sec
```

Customer Spanning Tree Enabled Protocol RSTP:

```
Bridge Id        Priority 65535
                 Address 00:01:02:03:04:02
                 Hello Time 2 sec, Max Age 20 sec, Forward Delay 15 sec
Name        Role         State        Cost      Prio    Type
----        ----        -----       ----      ----    ------
PEP-Service: 2   Designated  Forwarding      128     32      SharedLan
CEP-Gi0/2           Designated   Forwarding   200000   32      SharedLan
-------------------------------------------------------
```

Configuration of C-VLAN Component Spanning Tree parameters

None of the C-VLAN Spanning Tree parameters are configured. C-VLAN Component Spanning Tree uses the values given in the standard (Section 13 of IEEE 802.1ad D6.0). The only configuration that is allowed in a C-VLAN Component Spanning Tree is to enable or disable the C-VLAN Spanning Tree.

Configuring C-VLAN Spanning Tree module status

C-VLAN Spanning Tree is enabled or disabled by configuring the Spanning Tree status of the CEP.

Step	Action
1	Enter the Global Configuration mode. `aos#configure terminal`
2	Enter the interface configuration mode. `aos(config)# interface gigabitethernet 0/2`

Step	Action

3	Disable the Customer spanning tree by disabling the spanning tree on the port 2.
	`aos(config-if)# spanning-tree  disable`
	`aos(config-if)#end`

4	View the customer spanning tree by executing the following command.
	`aos# show customer spanning-tree`
	`Switch default`
	`Port [Gi0/2] Root Id  Priority  0`
	`Address  00:00:00:00:00:00`
	`Cost  0`
	`Root Ports`
	`Hello Time 2 Sec, Max Age 20 Sec, Forward Delay 15 Sec`
	`Customer Spanning tree Protocol has been disabled`
	`Bridge Id  Priority 65535`
	`Address 00:01:02:03:04:02`
	`Hello Time 2 sec, Max Age 0 sec, Forward Delay 15 sec`
	`Name  Role  State  Cost  Prio  Type`
	`----  ----  -----  ----  ----  ------`
	`PEP-Service: 2  Disabled  Unknown  128  32  SharedLan`
	`CEP-Gi0/2  Disabled  Unknown  200000  32  SharedLan`
	`----------`

5	The Customer Spanning-Tree is viewed as:
	`aos# show customer spanning-tree`
	`Switch default`
	`Port [Gi0/2]`
	`We are the root of the Spanning Tree`
	`Root Id  Priority  65535`
	`Address  00:01:02:03:04:02`
	`Cost  0`
	`Root Ports`
	`Hello Time 2 Sec, Max Age 0 Sec, Forward Delay 0 Sec`
	`Customer Spanning Tree Enabled Protocol RSTP`
	`Bridge Id  Priority 65535`
	`Address 00:01:02:03:04:02`
	`Hello Time 2 sec, Max Age 20 sec, Forward Delay 15 sec`
	`Name  Role  State  Cost  Prio  Type`
	`----  ----  -----  ----  ----  ------`
	`PEP-Service: 2  Designated  Forwarding  128  32  SharedLan`
	`CEP-Gi0/2  Designated  Forwarding  200000  32  SharedLan`
	`----------`

Configuring S-VLAN Component

The S-VLAN component is ports other than Customer Edge Ports and Provider Edge ports.

Procedure

Step	Action
1	Enter the global configuration mode. `aos# config terminal`
2	Enter the switch configuration mode. `aos(config)# switch default`
3	Enter the VLAN 2 configuration mode. `aos(config-switch)# vlan 2`

4	Configure the Member ports for the Service VLAN 2. Note that this must be a VLAN without an IP address.
	`aos(config-switch-vlan)# ports gigabitethernet  0/1,0/2 untagged gigabitethernet 0/2`
	`aos(config-switch-vlan)# end`

5	View the service VLAN by executing the following command. `aos#sh vlan brief`

Step	Action

```
aos# sh vlan id 2
   Switch default
   Vlan database
   -------------
   Vlan ID              : 1
   Member Ports         : None
   Untagged Ports       : None
   Forbidden Ports      : None
   Name                 :
   Status               : Permanent
   Egress Ethertype: 0x88a8
   ServiceType          : E-LAN
   MacLearning Status   : Disabled
   MacLearning Oper-Status: Disabled
   ----------------------------------------------------
   Vlan ID              : 3
   Member Ports         : Gi0/1, Gi0/2
   Untagged Ports       : Gi0/2
   Forbidden Ports      : None
   Name                 :
   Status               : Permanent
   Egress Ethertype: 0x88a8
   ServiceType          : E-LAN
   MacLearning Status   : Disabled
   MacLearning Oper-Status: Enabled
```

Note: A Provider Network Port (PNP) is not configured as untagged port of a S-VLAN.

```
S-VLAN Component Spanning Tree is a Multiple Instance Spanning Tree or a Rapid
Spanning Tree.
A S-VLAN Spanning Tree is viewed as:
aos# show spanning-tree
Switch default
Root Id          Priority   32768
   Address    00:01:02:03:04:01
   Cost       0
   Port       0 [0]
   This bridge is the root
   Max age 20 Sec, forward delay 15 Sec
MST00

Spanning tree Protocol Enabled.
S-VLAN Component: MST00 is executing the mstp compatible Multiple Spanning Tree
Protocol
Bridge Id        Priority  32768
   Address  00:01:02:03:04:01
   Max age is 20 sec, forward delay is 15 sec

Name      Role         State        Cost     Prio   Type
----      ----         -----        ----     ----   ------
Gi0/1     Designated   Forwarding   200000   128    SharedLan
Gi0/2     Disabled     Discarding   200000   128    SharedLan
```

Configuring a Flow for 802.1ad Bridge Port Type

In this figure, CB1 and CB2 are the Customer Bridges transparently connected through the Provider Network PB1 and PB2.

Figure 2: A Simple Deployment Scenario for 802.1ad Bridges

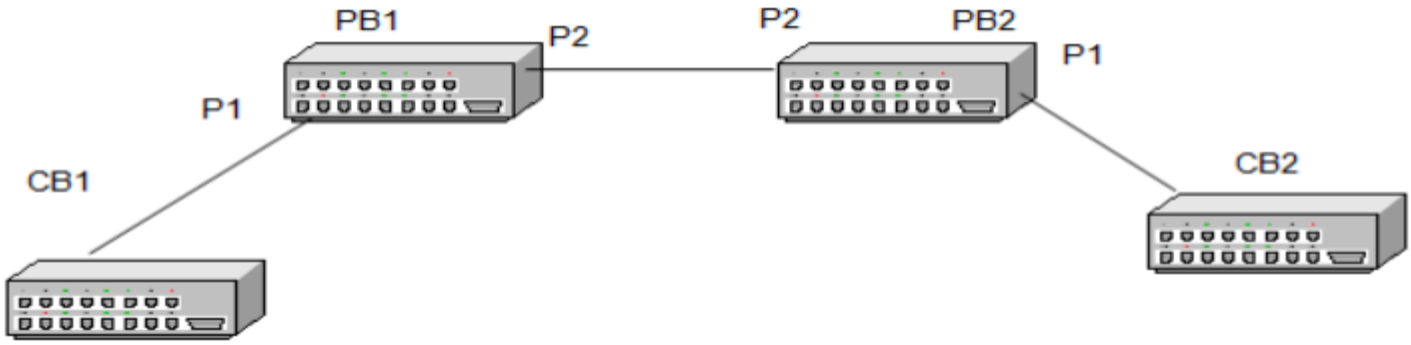

Switch PB1:

- MAC Address: 00:01:02:03:04:01
- VLAN 1 - 10.0.0.1/255.0.0.0

Switch PB2:

- MAC Address: 00:02:02:03:04:01
- VLAN 1 – 10.0.0.2 /255.0.0.0

Switch CB1:

- MAC Address: 00:03:02:03:04:01
- VLAN 1 – 10.0.0.10/255.0.0.0

Switch CB2:

- MAC Address: 00:04:02:03:04:01
- VLAN 1 – 10.0.0.20/255.0.0.0

Configuring connectivity through CEP

The connectivity through CEP is configured as follows:

- Configure PB1 and PB2 as Provider Edge Bridge.
- Configure CB1 and CB2 as Customer Bridges.
- Create VLANVLAN 5 with member ports as P1, P2 in CB1 and CB2.
- Configure PB1 and PB2 as follows:
  - P1 as Customer Edge Port
  - C-VID registration entry configuration for port P1 is as follows:

```
switchport customer-VLAN 5 service-VLAN 2 untagged-pep false untagged-cep false
```

  - S- VLAN 2 with member ports as P1, P2, with P1 as untagged port.

Now the C-VLAN tagged packets with VLANVLAN ID as 5 reaches port P1 of CB2 sent from port P1 of CB1.

Configuring transparent connectivity through CNP (Port Based)

The connectivity through CNP (Port Based) is configured as follows:

- Configure PB1 and PB2 as Provider Edge Bridge.
- Configure CB1 and CB2 as Customer Bridges.
- Create VLANVLAN 5 with member ports as P1, P2 in CB1 and CB2.
- Configure the following in PB1 and PB2:
  - P1 as Customer Network Port (Port Based)

- S-VLAN 2 with member ports as P1, P2 with P1 as untagged port.
- PVID of the port P1 as VLAN 2.

Now the C-VLAN tagged packets with VLANVLAN ID as 5, reaches port P1 of CB2 sent from port P1 of CB1.

Handling Priority in Provider Bridges

Priority and drop_eligible parameters are encoded in the priority code point (PCP) field of the VLAN tag using Priority Code Point Encoding Table.

On packet reception, priority and drop_eligible parameters are decoded from the PCP field of the VLAN tag using Priority Code Point Decoding Table.

This section covers the following topics.

Configuring PCP Encoding table 53
Configuring PCP Decoding table 54
Configuring PCP Selection Row 54
Configuring Service Priority Regeneration table 55
Configuring Use DEI 56

Configuring PCP Encoding table

For each port, the PCP Encoding table has 16 entries corresponding to each of the possible combinations of eight possible values of priority (0-7) with two possible values of drop_eligible (True or False). The input for the PCP Encoding table is PCP Selection Row, Priority and Drop_Eligible, and the output for the PCP Encoding table is PCP Value.

Whenever a packet has to be sent out on a S-Tagged port, the PCP Encoding table provides the value of the PCP in the S-Tag.

Procedure

Step	Action
1	Enter the Global Configuration mode. `aos# configure terminal`
2	Enter the Interface configuration mode. `aos(config)# interface gigabitethernet 0/1`

3	Configure the PCP Encoding table by executing the following command.
	`aos(config-if)# pcp-encoding 8POD priority 5 drop-eligible false pcp 6`
	`aos(config-if)# end`

4	View the PCP Encoding table by executing the following command.
	`aos# show provider-bridge pcp encoding`
	`Pcp Encoding Table`
	`----------`
	`Switch - default`
	`Port Gi0/1`
	`----------`
	`DropEligible: 0 0DE 1 1DE 2 2DE 3 3DE 4 4DE 5 5DE 6 6DE 7 7DE`
	`Priority :`
	`----------`
	`8POD : 0 0 1 1 2 2 3 3 4 4 6 5 6 6 7 7`
	`7P1D : 0 0 1 1 2 2 3 3 5 4 5 4 6 6 7 7`
	`6P2D : 0 0 1 1 3 2 3 2 5 4 5 4 6 6 7 7`
	`5P3D : 1 0 1 0 3 2 3 2 5 4 5 4 6 6 7 7`
	
	`Port Gi0/2`
	`----------`
	`DropEligible: 0 0DE 1 1DE 2 2DE 3 3DE 4 4DE 5 5DE 6 6DE 7 7DE`
	`Priority :`
	`----------`

Step	Action
	8POD : 0 0 1 1 2 2 3 3 4 4 5 5 6 6 7 7 7P1D : 0 0 1 1 2 2 3 3 5 4 5 4 6 6 7 7 6P2D : 0 0 1 1 3 2 3 2 5 4 5 4 6 6 7 7 5P3D : 1 0 1 0 3 2 3 2 5 4 5 4 6 6 7 7

Configuring PCP Decoding table

For each port, the PCP Decoding table has eight entries corresponding to each of the possible PCP values. The input for the PCP Decoding table is PCP Selection Row and PCP Value, and the output for the PCP Decoding table is Priority and Drop Eligible.

Whenever a packet is received on a port with S-Tag, the PCP Decoding table provides the value of the Priority and Drop-Eligible for the packet.

Procedure

Step	Action
1	Enter the global configuration mode. `aos# configure terminal`
2	Enter the interface configuration mode. `aos(config)# interface gigabitethernet 0/1`

3	Configure the PCP Decoding table by executing the following command.
	`aos(config-if)# pcp-decoding 8POD pcp 7 priority 6 drop-eligible false`
	`aos(config-if)# end`

4	View the PCP decoding table by executing the following command.
	`aos# show provider-bridge pcp decoding`
	`Pcp Decoding Table`
	`----------`
	`Switch - default`
	`Port Gi0/1`
	`----------`
	`PCP : 0 1 2 3 4 5 6 7`
	`----------`
	`8POD : 0 1 2 3 4 5 1 2 2 3 3 4 4 6 5 6 6 7 7`
	`7P1D : 0 0 1 1 2 2 3 3 5 4 5 4 6 6 7 7`
	`6P2D : 0 0 1 1 3 2 3 2 5 4 5 4 6 6 7 7`
	`5P3D : 1 0 1 0 3 2 3 2 5 4 5 4 6 6 7 7x 7`
	`5P3D : 0DE 0 2DE 2 4DE 4 6 7`
	`Port Gi0/2`
	`----------`
	`PCP : 0 1 2 3 4 5 6 7`
	`----------`
	`8POD : 0 1 2 3 4 5 6 7`
	`7P1D : 0 1 2 3 4DE 4 6 7`
	`6P2D : 0 1 2DE 2 4DE 4 6 7`
	`5P3D : 0DE 0 2DE 2 4DE 4 6 7`

Configuring PCP Selection Row

The PCP Selection Row is configured as per the port. The row in PCP Encoding and PCP Decoding table corresponding to the configured value is for the PCP encoding and PCP decoding on this port.

The conventions followed in naming the PCP Selection Row are:

- Number of priorities with no drop precedence.
- Number of priorities with drop precedence.

For an example: In 6P2D, 6 priorities contain no drop precedence and the rest 2 priorities contain drop precedence option.

Step	Action
1	Enter the global configuration mode. `aos# configure terminal`

Step	Action
2	Enter the interface configuration mode. `aos(config)# interface gigabitethernet 0/1`

3	Configure the PCP selection row for the port P1.
	`aos(config-if)#switchport provider-bridge pcp-selection-row  6P2D`
	`aos(config-if)#end`

4	View the provider bridge port configuration by executing the following command.
	`aos#sh provider-bridge port config port gi  0/5`
	`Switch default`
	`Provider Bridge Port configuration table`
	`----------`
	`Port Gi0/5`
	`Port Type  : Provider Network Port`
	`Service Vlan Classification  : PVID`
	`EtherType Swap Status  : Disable`
	`Service Vlan Translation Status  : Enable`
	`Require Drop Encoding  : False`
	`Use_Dei  : False`
	`PCP Selection Row  : 6P2D`
	`Unicast Mac Learning Status  : Enable`
	`Unicast Mac Learning Limit  : 8000`

Configuring Service Priority Regeneration table

The Service Priority Regeneration table is applied only on internal CNP of the S-VLAN component. For every service offered on a CEP, a logical Provider Edge port is created in the C-VLAN component side and a logical internal CNP is created in the S-VLAN component. Packets coming out of the PEP enter the S-VLAN component through internal CNP. Packets coming to the internal CNP are from the customer side. Hence the priority for those packets is regenerated in internal CNP. Whenever a packet is received on a CEP, it has to be transmitted to the provider network, the priority has to be regenerated and the Priority Regeneration table is applied.

The CEP port number and S-VLAN ID index the Priority Regeneration table. Therefore for PEP (created by the CVID Registration table) there is a Service Priority Regeneration table in S-VLAN component on internal CNPs. By default, Received Priority and Regenerated Priority are the same.

Procedure

Step	Action
1	Enter the global configuration mode. `aos# configure terminal`
2	Enter the interface configuration mode. `aos(config)# interface gigabitethernet 0/2`

3	Configure the Service priority regeneration table by executing the following command.
	`aos(config-if)# service-vlan 2 recv-priority 5 regen-priority 2`
	`aos(config-if)#end`

4	View the service priority regeneration table by executing the following command.
	`aos# show provider-bridge priority regen`
	`Service Priority Regeneration table`
	`----------`
	`Switch - default`
	`Port : Gi0/2  Service VLAN-ID : 2`
	`Receive Priority  Regenerated Priority`
	`----------  ----------`
	`0  0`
	`1  1`
	`2  2`
	`3  3`
	`4  4`
	`5  2`
	`6  6`
	`7  7`

Configuring Use DEI

The Use DEI allows the S-Tag to convey eight distinct priorities each with a drop eligible indication for each port.

Procedure

When Use DEI is set to true on a port:

- Packets sent with drop_eligible true has USE_DEI bit in the VLANVLAN tag set.
- Packets received on this port with USER_DEI filed in the VLANVLAN tag set are considered as packets with drop_eligible true.
- Default value of Use DEI is false.

To configure Use DEI, execute the following commands.

Step	Action
1	Enter the global configuration mode. `aos# configure terminal`
2	Enter the interface configuration mode. `aos(config)# interface gigabitethernet  0/1`

3	Configure the use-dei variable for the port 1 as `true` by executing the following command.
	`aos(config-if)# switchport provider-bridge use-dei  true`
	`aos(config-if)#end`

4	View the provider bridge port configuration by executing the following command.
	`aos# show provider-bridge port config port gigabitethernet 0/1`
	`Switch - default`
	`Provider Bridge Port configuration table`
	`----------`
	`Port Gi0/1`
	`Port Type : Provider Network Port`
	`Service VLAN Classification : PVID`
	`Ingress EtherType : 0x88a8`
	`Egress EtherType : 0x88a8`
	`EtherType Swap Status : Disable`
	`Service VLAN Translation Status : Enable`
	`Require Drop Encoding : False`
	`Use_Dei : True`
	`PCP Selection Row : 8P0D`
	`Unicast Mac Learning Status : Enable`
	`Unicast Mac Learning Limit : 150`

Configuring VLAN Translation Table

The VLAN Translation table is used for interconnecting two different provider networks. VLAN Translation table provides a one-to-one bidirectional mapping between the Local S-VLAN and the Relay S-VLAN.

- Local S-VLAN - Used in Data and Protocol frames for transmission and reception of frames.
- Relay S-VLAN - Used by Filtering and Forwarding Processes of the SVLAN component.

The VLAN Translation table is applicable only for Provider Network Port and Customer Network Ports (S-Tagged).

Procedure

Step	Action
1	Enter the global configuration mode. `aos# configure terminal`
2	Enter the interface configuration mode. `aos(config)# interface gigabitethernet  0/1`

Step	Action

3	Configure the VLAN Translation table by executing the following command.
	`aos(config-if)# switchport service vlan mapping  20 2`
	`aos(config-if)#end`

4	View the VID Translation table by executing the following command.
	`aos# show service vlan mapping`
	`Switch - default`
	`Service Vlan Mapping`
	`-------------------------`
	`Port Gi0/1`
	`-----------`
	`Local service vlan  Relay service vlan`
	`20  2`

VLAN Translation table is enabled or disabled on a per port basis. By default, it is enabled on PNP and CNP (S-Tagged).

Step	Action
1	Enter the global configuration mode. `aos# configure terminal`
2	Enter the interface configuration mode. `aos(config)# interface gigabitethernet  0/1`

3	Disabling the VID Translation table on port 1.
	`aos(config-if)# set switchport service vlan swap  disable`
	`aos(config-if)#end`

4	View the VID Translation status for the port by executing the following command.
	`aos# show provider-bridge port config port gigabitethernet 0/1`
	`Switch - default`
	`Provider Bridge Port configuration table`
	`----------`
	`Port Gi0/1`
	`Port Type  : Provider Network Port`
	`Service Vlan Classification  : PVID`
	`Ingress EtherType  : 0x88a8`
	`Egress EtherType  : 0x88a8`
	`EtherType Swap Status  : Disable`
	`Service Vlan Translation Status  : Disable`
	`Require Drop Encoding  : False`
	`Use_Dei  : False`
	`PCP Selection Row  : 8P0D`
	`Unicast Mac Learning Status  : Enable`
	`Unicast Mac Learning Limit  : 150`

Tunneling in Provider Network

Customer networks are connected transparently through the provider network. The data traffic sent by the customer is passed transparently through the provider network. Similarly, the customer control packets are treated as data packet, and are switched as data packets in the provider network, if tunneling is enabled for those control packets in the edge of the provider network. The following sections explain how the other layer 2 protocols are tunneled across the provider network.

Protocol tunneling is configured only on customer point of attachments (that is on Customer Edge Ports, Customer Network Port (Port-Based), Proprietary Customer Edge Port and Proprietary Customer Network Ports).

Note: A Customer Network Port (S-Tagged) tunneling option is not supported, even though it is a customer point of attachment. Protocol tunneling is also not supported on all other port types except mentioned above.

Note: L2 Protocol Tunneling for LLDP & ECFM is not supported.

Control packets received on a port is tunneled or peered or discarded based on the options (Tunnel or Peer or Discard) configured through the protocol tunnel command. Tunneled protocol packets are treated as data packets and are forwarded in the S-VLAN to which they belong.

Tunneling Spanning Tree protocol

The Provider Spanning Tree address is different from the Customer Spanning Tree protocol address. Hence in the provider network, the Customer Spanning Tree BPDUs are treated as data packets and are forwarded without changing the destination address.

- In the C-VLAN component, Rapid Spanning Tree runs and interacts with the Customer Spanning Tree BPDUs received on C-VLAN component ports. By default, the STP tunnel status on CEP is peer.
- To tunnel the STP packet on CEP, the C-VLAN Spanning Tree must be disabled on that CEP, and there must be only one PEP in that C-VLAN component.
- Only on CEP, the STP tunnel status is set to peer and on all other ports, it is not set, where the protocol tunneling does not supports peer option.
- STP tunnel status is set to tunnel or it is set to discard on all port types, where the protocol tunneling option is set.

Tunneling GVRP protocol

- IEEE 802.1ad has defined a new address for running GVRP in provider networks. So, the Customer GVRP packets are transmitted transparently in provider networks.
- GVRP tunnel status is set to tunnel or it is set to discard on any of the ports, where the protocol tunneling is supported.
- GVRP tunnel status is not set to peer on any of the ports.

Tunneling GMRP protocol

In Provider Edge and Provider Core Bridges, GMRP is always disabled. So, the Customer GMRP packets are tunneled transparently across the provider networks.

Tunneling IGMP protocol

In Provider Edge and Provider Core Bridges, IGMP protocol is always disabled. So, the Customer IGMP packets are tunneled transparently across the provider networks.

Tunneling DOT1X protocol

In Provider Edge and Provider Core Bridges, Dot1x protocol is always enabled by default. Dot1x must be enabled in any of the Provider Edge and Provider Core Bridges of the entire provider network to enable the tunneling of Dot1x protocol.

Tunneling LACP protocol

In Provider Edge and Provider Core Bridges, LACP is always enabled by default. LACP must be enabled on that port to enable the tunneling of LACP Protocol on a port.

In LACP tunneling, a single service instance is required to tunnel the LACP packets between the two customer points of attachment across the provider network. So, to aggregate two ports on one point of attachment to two ports of another point of attachment, two service instances are required.

Procedure

Step	Action
1	Enter the global configuration mode `aos# configure terminal`
2	Enter the interface configuration mode `aos(config)# interface gigabitethernet 0/1`
3	Configure the STP protocol tunnel status for Port 1 as `peer` `aos(config-if)#l2protocol-peer stp`

Step	Action
4	Configure the GVRP protocol tunnel status for Port 1 as `tunnel` `aos(config-if)#l2protocol-tunnel  gvrp`

5	Configure the GMRP protocol tunnel status for Port 1 as `discard`
	`aos(config-if)#l2protocol-discard gmrp`
	`aos(config-if)#end`

6	View the protocol tunnel status by executing the following command
	`aos# sh provider-bridge port config port gi 0/2`
	`Switch - default`
	`Provider Bridge Port configuration table`
	`----------`
	`Port Gi0/2`
	`Port Type : Customer Edge Port`
	`Dot1x Protocol Tunnel Status : Peer`
	`LACP Protocol Tunnel Status : Peer`
	`Spanning Tree Tunnel Status : Peer`
	`MVRP Protocol Tunnel Status : Discard`
	`MMRP Protocol Tunnel Status : Discard`
	`GVRP Protocol Tunnel Status : Tunnel`
	`GMRP Protocol Tunnel Status : Discard`
	`IGMP Protocol Tunnel Status : Peer`
	`ELMI Protocol Tunnel Status : Peer`
	`LLDP Protocol Tunnel Status : Peer`
	`ECFM Protocol Tunnel Status : Peer`
	`Service Vlan Classification : Customer Vlan`
	`EtherType Swap Status : Disable`
	`Service Vlan Translation Status : Disable`
	`Require Drop Encoding : False`
	`Use_Dei : False`
	`PCP Selection Row : 8P0D`
	`Unicast Mac Learning Status : Enable`
	`Unicast Mac Learning Limit : 8000`
	`Customer Vlan : 1`
	`Customer Vlan Status : Enabled`

Configuring tunnel MAC address

For Spanning Tree and GVRP packets, the destination Mac addresses are different in provider network and customer network. So, for tunneling these control PDUs, there is no need to change the destination Mac address. But to interop with the Q-in-Q bridges, the destination Mac address for these control packets are changed on those ports that are connected to Q-in-Q bridges.

For other protocol tunneling, the destination Mac address is to be changed to make the protocol frames appear as data packet in the rest of the provider network.

The default tunnel MAC address defined for each protocol is given below.

```
aos# sh l2protocol tunnel-mac-address
  Switch - default
  VLAN tunnel MAC address
  --------------------------
  Dot1x tunnel MAC address : 01:00:0c:cd:cd:d3
  LACP tunnel MAC address : 01:00:0c:cd:cd:d4
  STP tunnel MAC address : 01:00:0c:cd:cd:d0
  MVRP tunnel MAC address : 01:00:0c:cd:cd:d5
  MMRP tunnel MAC address : 01:00:0c:cd:cd:d6
  GVRP tunnel MAC address : 01:00:0c:cd:cd:d1
  GMRP tunnel MAC address : 01:00:0c:cd:cd:d2
  ELMI tunnel MAC address : 01:00:0c:cd:cd:d7
  LLDP tunnel MAC address : 01:00:0c:cd:cd:d8
  ECFM tunnel MAC address : 01:00:0c:cd:cd:d9
```

Procedure

Step	Action
1	Enter the global configuration mode. `aos# configure terminal`
2	Enter the switch configuration mode. `aos(config)# switch default`

3	Configure the GMRP protocol tunnel Mac address as 01:22:33:44:55:66.
	`aos(config-switch)# gmrp-tunnel-address  01:22:33:44:55:66`
	`aos(config-switch)#end`

4	View the protocol tunnel mac address by executing the following command.
	`aos# show l2protocol tunnel-mac-address`
	`VLAN tunnel MAC address`
	`---------- Switch - default ----------`
	`Dot1x tunnel MAC address :  01:00:0c:cd:cd:d3`
	`LACP  tunnel MAC address :  01:00:0c:cd:cd:d4`
	`STP  tunnel MAC address :  01:00:0c:cd:cd:d0`
	`GVRP  tunnel MAC address :  01:00:0c:cd:cd:d1`
	`GMRP  tunnel MAC address :  01:22:33:44:55:66`

Protocol Tunneling in Customer Bridges

The Provider Network is comprised of both customer bridges and provider bridges. The customer bridges present in the provider network operate only on C-VLANs. The data packets in the customer bridges will be switched in the provider network using only C-VLANs.

But the protocol packets in the customer bridges must be tunneled. For enabling Protocol tunneling on a port in customer bridge (present in provider network), the port need not be an access port.

The Administrator can configure a protocol tunnel status as tunnel/discard only when a particular protocol is disabled on that port. This rule applies to STP, GVRP and GMRP protocols.

If there are IGMP and DOT1X, for configuring the protocol tunnel status as tunnel/discard, the administrator must disable the protocol in the system.

If there is LACP, the protocol tunnel status cannot be configured on port-channel interfaces.

The tunnel MAC address for all the protocols can also be configured in the customer bridges.

Configuring Port MAC Learning Status and Limit

The Administrator configures the MAC Learning Status of each port as enabled or disabled. By default, each port in the bridge is allocated a limit on the number of MAC addresses that are learned on that port. The MAC Learning Limit on each port is also configurable. The port MAC Learning Limit is applicable only for the dynamic learned entries.

Procedure

Step	Action
1	Enter the global configuration mode. `aos# configure terminal`
2	Enter the interface configuration mode. `aos(config)# interface gigabitethernet 0/1`
3	Configure the unicast mac learning status as `disable` Note that you can only set unicast-mac learning on a VLAN, not on an interface. `aos(config-if)# switchport unicast-mac learning disable`

4	Configure the unicast mac learning limit as **40**.
	`aos(config-if)# switchport unicast-mac learning limit 40`
	`aos(config-if)#end`

Step	Action

5	View the unicast mac learning status and limit by executing the following command.
	`aos# show provider-bridge port config port gigabitethernet 0/1`
	`Switch - default`
	`Provider Bridge Port configuration table`
	`----------`
	`Port Gi0/1`
	`Port Type : Provider Network Port`
	`Service Vlan Classification : PVID`
	`Ingress EtherType : 0x88a8`
	`Egress EtherType : 0x88a8`
	`EtherType Swap Status : Disable`
	`Service Vlan Translation Status: Disable`
	`Require Drop Encoding : False`
	`Use_Dei : False`
	`PCP Selection Row : 8P0D`
	`Unicast Mac Learning Status : Disable`
	`Unicast Mac Learning Limit : 40`

Configuring Static Multicast MAC Limit

Static Multicast MAC Limit is configured at run time. By default, Multicast Mac Limit is the total size of the Multicast MAC table.

Procedure

Step	Action
1	Enter the global configuration mode. `aos# configure terminal`
2	Enter the switch configuration mode. `aos(config)#switch default`

3	Configure the multicast-mac limit as **4**.
	`aos(config-switch)# multicast-mac limit 4`
	`aos(config-switch)# end`

Configuring Ether Type Swap Table

In Provider Bridges, the port recognizes and processes only the S-Tagged packet with ether type 0x88a8. But in the provider network, there is a possibility to inter-operate with different networks that use different ether types. Swap table is configured, so that the different ether types are interpreted as the S-Tag ether type.

- Local ether type - Ether type that is present in frame.
- Relay ether type - Used for processing the ether type of the frame.

Procedure

Step	Action
1	Enter the global configuration mode. `aos# configure terminal`
2	Enter the interface configuration mode. `aos(config)# interface gigabitethernet 0/1`

3	Configure the ether type swap table by executing the following command.
	`aos(config-if)# switchport Dot1q ethertype mapping 0x88a1 0x88a8`
	`aos(config-if)# end`

4	View the ether type swap table.
	`aos# show ethertype mapping`
	`Switch - default`
	`EtherType Mapping`

Step	Action

	`------------------------`
	`Port Gi0/1`
	`-----------`
	`Local EtherType  Relay EtherType`
	`0x88a1  0x88a8`

Configuring Customer Port VLAN ID

This configuration is valid only for CEP, PCEP and PCNP ports. When CEP receives an untagged packet, the packet is classified into C-VLAN based on the CPVID configured for the Customer Edge Port. The above behavior is enabled or disabled in the command switchport Dot1q customer vlan disable/enable.

Procedure

Step	Action
1	Enter the global configuration mode. `aos# configure terminal`
2	Enter the interface configuration mode. `aos(config)# interface gigabitethernet  0/1`
3	Configure the bridge port type as Customer Edge Port. `aos(config-if)# bridge port-type  CustomerEdgePort`
4	Configure the Customer VLAN PVID as 10 for Port 1. `aos(config-if)# switchport dot1q customer vlan  10`

5	Configure the Customer VLAN classification status as **disable**.
	`aos(config-if)# switchport dot1q customer vlan disable`
	`% Customer VLAN can not be disabled on a customerEdgePort.`

6	View the provider bridge port configurations by executing the following command.
	`aos# show provider-bridge port config port gigabitethernet 0/1`
	`Switch - default`
	`Provider Bridge Port configuration table`
	`----------`
	`Port Gi0/1`
	`Port Type  : Customer Edge Port`
	`Dot1x Protocol Tunnel Status  : Peer`
	`LACP Protocol Tunnel Status  : Peer`
	`Spanning Tree Tunnel Status  : Peer`
	`GVRP Protocol Tunnel Status  : Discard`
	`GMRP Protocol Tunnel Status  : Discard`
	`IGMP Protocol Tunnel Status  : Discard`
	`Service Vlan Classification  : Customer Vlan`
	`Ingress EtherType  : 0x88a8`
	`Egress EtherType  : 0x8100`
	`EtherType Swap Status  : Disable`
	`Service Vlan Translation Status  : Disable`
	`Require Drop Encoding  : False`
	`Use_Dei  : False`
	`PCP Selection Row  : 8P0D`
	`Unicast Mac Learning Status  : Enable`
	`Unicast Mac Learning Limit  : 150`
	`Customer Vlan  : 10`
	`Customer Vlan Status  : Disabled`

Configuring S-VLAN

A S-VLAN is configured to provide two different service types, E-LINE and E-LAN.

E-LINE is defined as “point-to-point” service offered to a customer. E-LAN is defined as “multipoint-multipoint” service offered to a customer.

By default, the S-VLAN has a service type as “E-LAN”. If a service type is configured as ”E-LINE”, then the VLAN is not allowed to have more than two member ports.

Procedure

Step	Action
1	Enter the global configuration mode. `aos# configure terminal`
2	Enter the switch configuration mode. `aos(config)# switch default`
3	Enter the VLAN 2 configuration mode. `aos(config-switch)# vlan 2`

4	Configure the service type for the VLAN 2 as **e-line**.
	`aos(config-switch-vlan)# service-type e-line`
	`aos(config-switch-vlan)# end`

5	View the service type of the S-VLAN by executing the following command.
	`aos# sh vlan`
	`Switch default`
	
	`Vlan database`
	`----------`
	`Vlan ID : 1`
	`Member Ports : None`
	`Untagged Ports : None`
	`Forbidden Ports : None`
	`Name :`
	`Status : Permanent`
	`ServiceType : E-LAN`
	`MacLearning Status : Enabled`
	`----------`
	`Vlan ID : 2`
	`Member Ports : Gi0/1, Gi0/2`
	`Untagged Ports : None`
	`Forbidden Ports : None`
	`Name :`
	`Status : Permanent`
	`ServiceType : E-LINE`
	`MacLearning Status : Disabled`
	`----------`

Configuring Ingress and Egress Ether Type

A port is configured with Ingress and Egress ether type.

- Ingress ether type – If the ether type of the received packet matches with that of the Ingress ether type of the reception port, then that packet is considered as the tagged packet.
- Egress ether type – All the tagged outgoing packets on a port are sent out with the configured Egress ether type of the outgoing port.

By default, Ingress and Egress ether type for PNP is “0x88a8”. In case of CEP, the Ingress ether type is “0x8100”. And for PPNP, the Ingress and Egress ether type is “0x8100”.

Procedure

Step	Action
1	Enter the global configuration mode. `aos#configure terminal`
2	Enter the interface configuration mode. `aos(config)#interface gigabitethernet 0/1`

3	Configure the ingress Ether type for the Port 1 as **0x8899**.
	`aos# sh vlan port config port gi 0/2`
	`Switch default`
	`VLAN Port configuration table`
	`----------`
	`Port Gi0/2`
	`Bridge Port Type : Provider Network Port`
	`Port Vlan ID : 1`
	`Port Acceptable Frame Type : Admit All`
	`Port Mac Learning Status : Enabled`
	`Port Ingress Filtering : Disabled`
	`Port Mode : Hybrid`
	`Port Gvrp Status : Disabled`
	`Port Gmrp Status : Disabled`
	`Port Gvrp Failed Registrations : 2`
	`Gvrp last pdu origin : 00:00:00:00:00:00`
	`Port Restricted Vlan Registration : Disabled`
	`Port Restricted Group Registration : Unknown`
	`Mac Based Support : Disabled`
	`Subnet Based Support : Disabled`
	`Port-and-Protocol Based Support : Enabled`
	`Default Priority : 0`
	`Filtering Utility Criteria : Default`
	`Port Protected Status : Disabled`
	`Ingress EtherType : 0x8899`
	`Egress EtherType : 0x88a8`
	`Egress TPID Type : Portbased`
	`Allowable TPID 1 : 0x0`
	`Allowable TPID 2 : 0x0`
	`Allowable TPID 3 : 0x0`
	`View the ingress and Egress Ether type by executing the following command`
	`aos# sh provider-bridge port config port gi 0/5`
	`Switch default`
	`Provider Bridge Port configuration table`
	`----------`
	`Port Gi0/5`
	`Port Type : Customer Edge Port`
	`Dot1x Protocol Tunnel Status : Peer`
	`LACP Protocol Tunnel Status : Peer`
	`Spanning Tree Tunnel Status : Peer`
	`MVRP Protocol Tunnel Status : Discard`
	`MMRP Protocol Tunnel Status : Discard`
	`GVRP Protocol Tunnel Status : Discard`
	`GMRP Protocol Tunnel Status : Discard`
	`IGMP Protocol Tunnel Status : Peer`
	`ELMI Protocol Tunnel Status : Peer`
	`LLDP Protocol Tunnel Status : Peer`
	`ECFM Protocol Tunnel Status : Peer`
	`Service Vlan Classification : Customer Vlan`
	`EtherType Swap Status : Disable`
	`Service Vlan Translation Status : Disable`
	`Require Drop Encoding : False`
	`Use_Dei : False`
	`PCP Selection Row : 8P0D`
	`Unicast Mac Learning Status : Enable`
	`Unicast Mac Learning Limit : 8000`
	`Customer Vlan : 10`
	`Customer Vlan Status : Enabled`

Configuring Proprietary Port Types

Apart from the standard defined port types, there are proprietary port types. The proprietary port types are:

- Proprietary Provider Network Port (PPNP)

A standard port types has only restricted S- VLAN classification mechanisms, whereas PCEP and PCNP supports various types of S- VLAN classification mechanisms namely, Source MAC, Destination MAC, C- VLAN + Source MAC, C- VLAN + Destination Mac, Dscp, C- VLAN + Dscp, Source Ip, Destination Ip, Source Ip + Destination Ip, C- VLAN + Destination IP and PVID.

Procedure

Step	Action
1	Enter the global configuration mode. `aos#configure terminal`
2	Enter the interface configuration mode. `aos(config)# interface gigabitethernet  0/1`
3	Configure the bridge port type for port 1 as Proprietary Customer Edge Port. `aos(config-if)# bridge port-type propCustomerEdgeport`
4	Configure the Service VLAN classification method as **CvlanSrcMac**. `aos(config-if)# switchport service vlan classify VLAN cVLANSrcMac`

5	Configure the CVLAN Source MAC address classification table by executing the following command.
	`aos(config-if)# switchport service vlan  2 customer vlan 5 SrcMac 00:11:22:33:22:11`
	`aos(config-if)#end`

6	View the provider edge port configuration by executing the following command.
	`aos# show provider-bridge port config port gigabitethernet 0/1`
	`Switch - default`
	`Provider Bridge Port configuration table`
	`----------`
	`Port Gi0/1`
	`Port Type : Prop Customer Edge Port`
	`Dot1x Protocol Tunnel Status : Peer`
	`LACP Protocol Tunnel Status : Peer`
	`Spanning Tree Tunnel Status : Tunnel`
	`GVRP Protocol Tunnel Status : Tunnel`
	`GMRP Protocol Tunnel Status : Tunnel`
	`IGMP Protocol Tunnel Status : Tunnel`
	`Service Vlan Classification : Source Mac and Customer Vlan`
	`Ingress EtherType : 0x88a8`
	`Egress EtherType : 0x88a8`
	`EtherType Swap Status : Disable`
	`Service Vlan Translation Status : Disable`
	`Require Drop Encoding : False`
	`Use_Dei : False`
	`PCP Selection Row : 8P0D`
	`Unicast Mac Learning Status : Enable`
	`Unicast Mac Learning Limit : 150`
	`Customer Vlan Status : Disabled`

7	`aos# show service vlan`
	`Switch - default`
	`Service Vlan Classification`
	`----------`
	`Service Vlan  Port  Src MAC Address  Customer Vlan`
	`----------`
	`2  Gi0/1  00:11:22:33:22:11  5`
	
	`Service Vlan  Port  pvid`
	`----------`
	`1  Gi0/1  1`

Chapter 5. Configuration of CTR 8540 with Multiple Instances

Figure 3: Setup for Configuring CTR 8540 with MI

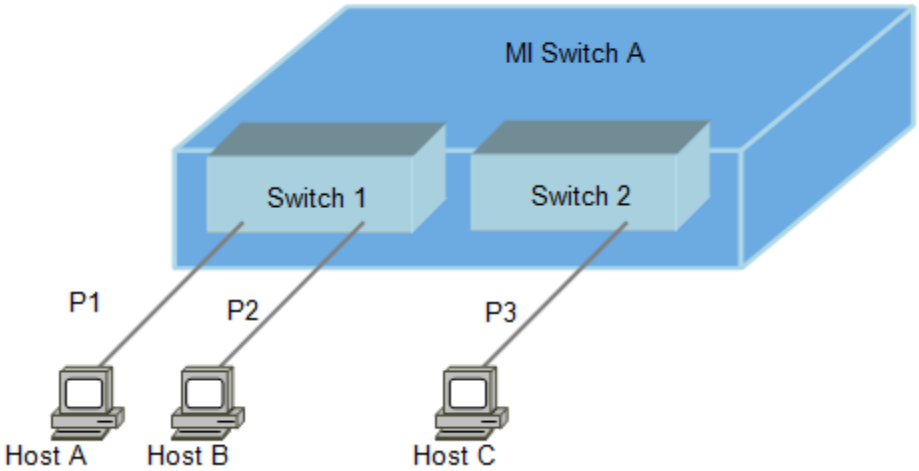

Enable all the interfaces for Multiple Instance configuration, and then map the interfaces to the corresponding switch (virtual instance).

The commands for the configuration of VLAN are same for both single and multiple instances except for a difference in the prompt that appears for the Switch with Multiple Instance support.

The prompt for the Global Configuration Mode is:

```
aos(config-switch)#
```

The prompt for the VLAN Configuration Mode is:

```
aos(config-switch-vlan)#
```

Execute the following commands in both the switches.

Step	Action

1	Enter the Global Configuration Mode and execute the commands.
	`aos# configure terminal`
	`aos(config)# switch 1`
	`aos(config-switch)# bridge-mode customer`
	`aos(config-switch)# exit`
	`aos(config)# switch 2`
	`aos(config-switch)# bridge-mode customer`
	`aos(config-switch)# exit`

2	Enable an Interface and Map it to a switch.
	`aos(config)# interface gigabitethernet 0/1`
	`aos(config-if)# no shutdown`
	`aos(config-if)# map switch 1`
	`aos(config-if)# exit`
	`aos(config)# interface gigabitethernet 0/2`
	`aos(config-if)# no shutdown`
	`aos(config-if)# map switch 1`
	`aos(config-if)# exit`
	`aos(config)# interface gigabitethernet 0/3`
	`aos(config-if)# no shutdown`
	`aos(config-if)# map switch 2`
	`aos(config-if)# exit`

Step	Action

3	Creating VLAN 1 in both the switches.
	`aos(config)# switch 1`
	`aos(config-switch)# vlan 1`
	`aos(config-switch-vlan)# ports gigabitethernet 0/1-2 untagged gigabitethernet 0/1-2`
	`aos(config-switch-vlan)# exit`
	`aos(config-switch)# exit`
	`aos(config)# switch 2`
	`aos(config-switch)# vlan 1`
	`aos(config-switch-vlan)# ports gigabitethernet 0/3 untagged gigabitethernet 0/3`
	`aos(config-switch-vlan)# end`

4	View VLAN in both switchs
	`aos# show vlan switch 1`
	`Switch 1`
	`Vlan database`
	`----------`
	`Vlan ID : 1`
	`Member Ports : Gi0/1 , Gi0/2`
	`Untagged Ports : Gi0/1 , Gi0/2`
	`Forbidden Ports : None`
	`Name :`
	`Status : Permanent`
	`----------`

5	`aos# show vlan switch 2`
	`Switch 2`
	`Vlan database`
	`----------`
	`Vlan ID : 1`
	`Member Ports : Gi0/3`
	`Untagged Ports : Gi0/3`
	`Forbidden Ports : None`
	`Name :`
	`Status : Permanent`
	`----------`

The following are the IP addresses of Hosts A, B and C.

- `Host A: 12.0.0.10`
- `Host B: 12.0.0.20`
- `Host C: 12.0.0.30`

As Hosts A and B are in the same switch (switch 1), ping succeeds.

Ping from Host A to Host B.

```
/# ping 12.0.0.20
  Reply Received From :12.0.0.20, TimeTaken : 50 msecs
  Reply Received From :12.0.0.20, TimeTaken : 80 msecs
  Reply Received From :12.0.0.20, TimeTaken : 70 msecs

  --- 12.0.0.20 Ping Statistics ---
  3 Packets Transmitted, 3 Packets Received, 0% Packets Loss
```

As Host C exists on a different switch, ping fails.

Ping from Host A to Host C.

```
/# ping 12.0.0.30
  Reply Not Received From : 12.0.0.30, Timeout : 5 secs
  Reply Not Received From : 12.0.0.30, Timeout : 5 secs
  Reply Not Received From : 12.0.0.30, Timeout : 5 secs
  --- 12.0.0.30 Ping Statistics ---
  3 Packets Transmitted, 0 Packets Received, 100% Packets Loss
```

Displaying Various Configurations

The show commands displays the configuration details of a particular switch or for all the switches.

For example execute the following command to view the VLAN device information for Switch 1.

```
aos# show VLAN device info switch 1
  Switch 1

  VLAN device configurations
  --------------------------
  VLAN Status                       : Enabled
  VLAN Oper status                  : Enabled
  Gvrp status                       : Disabled
  Gmrp status                       : Disabled
  Gvrp Oper status                  : Disabled
  Gmrp Oper status                  : Disabled
  Mac-VLAN Status                   : Disabled
  Protocol-VLAN Status              : Enabled
  Bridge Mode                       : Customer Bridge
  Traffic Classes                   : Enabled
  VLAN Operational Learning Mode    : Hybrid
  Version number                    : 1
  Max VLAN id                       : 4094
  Max supported VLANs               : 1024
```

Chapter 6. Flow Based Configuration

Figure 4: Flow Based Topology

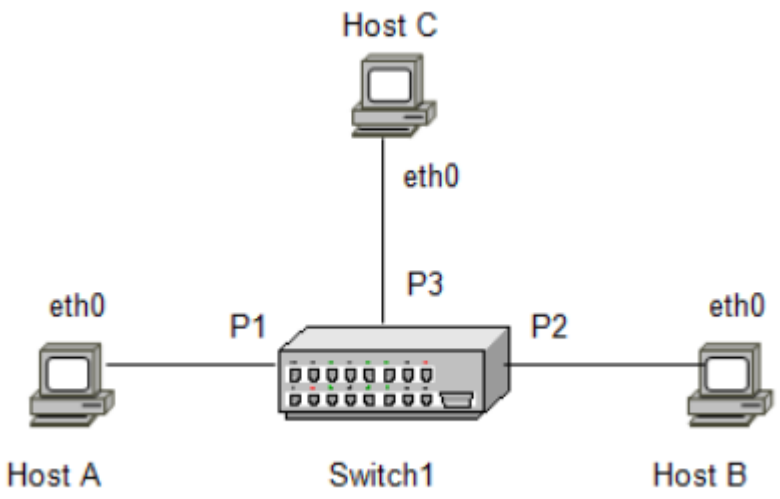

Table 6: Configuration for Flow Based Topology

Node	Port	MAC Address	IP Address
Host A	eth0	00:11:22:33:44:0a	12.0.0.10
Host B	eth0	00:11:22:33:44:0b	12.0.0.20
Host C	eth0	00:11:22:33:44:0c	12.0.0.30
Switch1	P1	00:01:02:03:04:01	12.0.0.1
	P2	00:01:02:03:04:02	
	P3	00:01:02:03:04:03	

Figure 5: Switch Topology

Table 7: Configuration for Switch Topology

Node	Port	MAC Address	IP Address
Switch1	eth0	00:01:02:03:04:01	12.0.0.1
	eth1	00:01:02:03:04:02	
Switch2	eth0	00:02:02:03:04:01	12.0.0.2
	eth1	00:02:02:03:04:02	

In this chapter

Configuring Static Unicast Entry 72
Configuring Static Multicast Entry 73
Configuring GVRP 74
Configuring GMRP 77
Forward–All 80
Classifying VLAN 82
Configuring Acceptable Frame Types 87
Configuring Ingress Filtering 88

Configuring Static Unicast Entry

To work with Static Unicast Entry, configure the following.

Configuration guidelines

- Configuration of static unicast entry.
- Configuration of VLAN.

Default configurations

Execute the following commands in Switch1:

Step	Action
1	Enter into the Global configuration mode. `aos# configure terminal`
2	Configure VLAN 2 in the switch. `aos(config)# vlan  2`
3	Configure the static VLAN entry with the required ports. `aos(config-vlan)# ports gigabitethernet  0/1-3`
4	Exit from VLAN configuration mode. `aos(config-vlan)# exit`
5	Enter into the Interface configuration mode. `aos(config)# interface gigabitethernet  0/1`
6	Make the interface up. `aos(config-if)# no shutdown`
7	Exit from Interface configuration mode. `aos(config-if)# exit`
8	Enter into the Interface configuration mode. `aos(config)# interface gigabitethernet  0/2`
9	Make the interface up. `aos(config-if)# no shutdown`
10	Exit from Interface configuration mode. `aos(config-if)# exit`
11	Enter into the Interface configuration mode. `aos(config)# interface gigabitethernet  0/3`
12	Make the interface up. `aos(config-if)# no shutdown`
13	Exit from Interface configuration mode. `aos(config-if)# exit`
14	Configure the static unicast entry. `aos(config)# mac-address-table static unicast  00:11:22:33:44:0b vlan 2 recv-port gigabitethernet 0/1 interface gigabitethernet 0/2`

Step	Action
15	Exit from the Global Configuration Mode. `aos(config)# exit`

16	View the VLAN related configurations by executing the following commands:
	`aos# show vlan id 2`
	`Vlan database`
	`-------------------`
	`Vlan ID : 2`
	`Member Ports : Gi0/1, Gi0/2, Gi0/3`
	`Untagged Ports : None`
	`Forbidden Ports : None`
	`Name :`
	`Status : Permanent`
	`----------`

17	`aos# show mac-address-table static unicast`
	`Vlan Mac Address RecvPort Status Ports`
	`------ -------- ---------- --------- ------`
	`2 00:11:22:33:44:0b Gi0/1 Permanent Gi0/2`
	`Total Mac Addresses displayed: 1`

After spanning topology settlement, send the tagged (VLAN 2) unicast data packet to Host B from Host A.

Configuring Static Multicast Entry

To work with Static Multicast Entry, configure the following.

Configuration guidelines

- Configuration of static unicast entry.
- Configuration of forward-unregistered entry.
- Configuration of VLAN.

Default configurations

- Configure the Forward-Unregistered static ports as none.
- Configure the Forward-All static ports as none.

Procedure

Execute the following commands in Switch1.

Step	Action
1	Enter into the Global configuration mode. `aos# configure terminal`
2	Configure VLAN 2 in the switch. `aos(config)# vlan 2`
3	Configure the static VLAN entry with the required ports. `aos(config-vlan)# ports gigabitethernet 0/1-3`
4	Exit from VLAN configuration mode. `aos(config-vlan)# exit`
5	Enter into Interface configuration mode. `aos(config)# interface gigabitethernet 0/1`
6	Make the interface up. `aos(config-if)# no shutdown`
7	Exit from Interface configuration mode. `aos(config-if)# exit`
8	Enter into Interface configuration mode. `aos(config)# interface gigabitethernet 0/2`

Step	Action
9	Make the interface up. `aos(config-if)# no shutdown`
10	Exit from Interface configuration mode. `aos(config-if)# exit`
11	Enter into Interface configuration mode. `aos(config)# interface gigabitethernet 0/3`
12	Make the interface up. `aos(config-if)# no shutdown`
13	Exit from Interface configuration mode. `aos(config-if)# exit`
14	Configure the static multicast entry. `aos(config)# mac-address-table static multicast 01:02:02:02:02:02 vlan 2 recv-port gigabitethernet 0/1 interface gigabitethernet 0/3`
15	Exit from the Global configuration mode. `aos(config)# exit`

16	View the static multicast information by executing the following command:
	`aos# show mac-address-table static multicast`
	`Static Multicast Table`
	`----------`
	`Vlan : 2`
	`Mac Address : 01:02:02:02:02:02`
	`Receive Port : Gi0/1`
	`Member Ports : Gi0/3`
	`Status : Permanent`
	`----------`
	`Total Mac Addresses displayed: 1`

17	View the created VLAN.
	`aos# show vlan id 2`
	`Vlan database`
	`----------`
	`Vlan ID : 2`
	`Member Ports : Gi0/1, Gi0/2, Gi0/3`
	`Untagged Ports : None`
	`Forbidden Ports : None`
	`Name :`
	`Status : Permanent`
	`----------`

After spanning topology settlement, send the tagged (VLAN 2) multicast data packet to Host C from Host A.

Configuring GVRP

To work with GVRP, configure:

- Dynamic VLAN learning
- Restricted VLAN registration

Dynamic VLAN learning

For Dynamic VLAN learning, configure the following.

Configuration guidelines

- Enable the interface P2 in Switch1 and Switch2.
- Configure VLAN.

Procedure

Execute the following commands in the switches.

Step	Action
At Switch1:	
1	Enter into the Global configuration mode. `aos# configure terminal`
2	Enter into the Interface configuration mode. `aos(config)# interface gigabitethernet 0/2`
3	Make the interface up. `aos(config-if)# no shutdown`
4	Return to Global configuration mode. `aos(config-if)# exit`
5	Configure VLAN 2 in the switch. `aos(config)# vlan 2`
6	Configure the static VLAN entry with the required ports. `aos(config-vlan)# ports gigabitethernet 0/1-2`
7	Return to Privileged EXEC mode. `aos(config-vlan)# end`
At Switch2:	
8	Enter into the Global configuration mode. `aos# configure terminal`
9	Enter into the Interface configuration mode. `aos(config)# interface gigabitethernet 0/2`
10	Make the interface up. `aos(config-if)# no shutdown`
11	Return to Global configuration mode. `aos(config-if)# exit`
At Switch1:	

12	View the VLANs in the switch.
	`aos# show vlan id 2`
	`Vlan database`
	`----------`
	`Vlan ID : 2`
	`Member Ports : Gi0/1, Gi0/2`
	`Untagged Ports : None`
	`Forbidden Ports : None`
	`Name :`
	`Status : Permanent`
	`----------`

At Switch2:	

13	View the VLANs in the switch.
	`aos# show vlan id 2`
	`Vlan database`
	`----------`
	`Vlan ID : 2`
	`Member Ports : Gi0/2`
	`Untagged Ports : None`
	`Forbidden Ports : None`
	`Name :`
	`Status : Dynamic Gvrp`
	`----------`

Configuring Restricted VLAN registration

To work with Restricted VLAN registration, the following are to be done.

Configuration guidelines

- Enable the interface P2 in Switch1 and Switch2.

- Configure VLAN.
- Configure Restricted VLAN registration.

Procedure

Execute the following commands in the switches.

Step	Action
At Switch1:	
1	Enter into the Global configuration mode. `aos# configure terminal`
2	Enter into the Interface configuration mode. `aos(config)# interface gigabitethernet 0/2`
3	Make the interface up. `aos(config-if)# no shutdown`
4	Return to Global configuration mode. `aos(config-if)# exit`
5	Configure VLAN 2 in the switch. `aos(config)# vlan 2`
6	Configure the static VLAN entry with the required ports. `aos(config-vlan)# ports gigabitethernet 0/1-2`
7	Return to Privileged EXEC mode. `aos(config-vlan)# end`
At Switch2:	
8	Enter into the Global configuration mode. `aos# configure terminal`
9	Enter into the Interface configuration mode. `aos(config)# interface gigabitethernet 0/2`
10	Make the interface up. `aos(config-if)# no shutdown`
11	Return to Privileged EXEC mode. `aos(config-vlan)# end`
Enable Restricted VLAN registration in Switch 2.	
12	Enter into the Global configuration mode. `aos# configure terminal`
13	Enter into the Interface configuration mode. `aos(config)# interface gigabitethernet 0/2`
14	Enable Restricted VLAN registration on a port. `aos(config-if)# vlan restricted enable`
15	Return to Privileged EXEC mode. `aos(config-if)# end`

Step	Action

16	View the status by executing the following command:
	`aos# show vlan port config port gigabitethernet 0/2`
	`Vlan Port configuration table`
	`----------`
	`Port Gi0/2`
	`Port Vlan ID : 1`
	`Port Acceptable Frame Type : Admit All`
	`Port Ingress Filtering : Disabled`
	`Port Mode : Hybrid`
	`Port Gvrp Status : Enabled`
	`Port Gmrp Status : Enabled`
	`Port Gvrp Failed Registrations : 0`
	`Gvrp last pdu origin : 00:01:02:03:04:02`
	`Port Restricted Vlan Registration : Enabled`
	`Port Restricted Group Registration: Disabled`
	`Mac Based Support : Disabled`
	`Port-and-Protocol Based Support : Enabled`
	`Default Priority : 0`
	`----------`

At Switch1:	

17	View the VLAN by using the command:
	`aos# show vlan id 2`
	`Vlan database`
	`----------`
	`Vlan ID : 2`
	`Member Ports : Gi0/1, Gi0/2`
	`Untagged Ports : None`
	`Forbidden Ports : None`
	`Name :`
	`Status : Permanent`
	`----------`

At Switch2:	

18	View the VLAN by using the command:
	`aos# show vlan id 2`
	`Vlan database`
	Note: VLAN 2 is not learnt in Switch2.

Configuring GMRP

To work with GMRP, configure Dynamic Multicast Group Learning and Restricted Group registration.

Dynamic Multicast Group learning

For Dynamic Multicast Group learning, complete the following.

Configuration guidelines

- Enable the interface P2 in Switch1 and Switch2.
- Configure static multicast entry.

Procedure

Execute the following commands in the switches.

Step	Action
At Switch1:	
1	Enter into the Global configuration mode. `aos# configure terminal`

Step	Action
2	Enter into the Interface configuration mode. `aos(config)# interface gigabitethernet 0/1`
3	Make the interface up. `aos(config-if)# no shutdown`
4	Return to Global configuration mode. `aos(config-if)# exit`
5	Enter into the Interface configuration mode. `aos(config)# interface gigabitethernet 0/2`
6	Make the interface up. `aos(config-if)# no shutdown`
7	Return to Global configuration mode. `aos(config-if)# exit`
8	Configure VLAN 2 in the switch. `aos(config)# vlan 2`
9	Configure the static VLAN entry with the required ports. `aos(config-vlan)# ports gigabitethernet 0/1-2`
10	Return to Global configuration mode. `aos(config-vlan)# exit`
12	Create the static multicast entry. `aos(config)# mac-address-table static multicast 01:02:02:02:02:02 VLAN 2 interface gigabitethernet 0/1`
12	Return to Privileged EXEC mode. `aos(config)# end`
At Switch 2:	
13	Enter into the Global configuration mode. `aos# configure terminal`
14	Enter into the Interface configuration mode. `aos(config)# interface gigabitethernet 0/2`
15	Make the interface up. `aos(config-if)# no shutdown`
16	Return to Global configuration mode. `aos(config-if)# exit`
At Switch1:	

17	View the multicast group entries in the switch.
	`aos# show mac-address-table static multicast`
	`Static Multicast Table`
	`----------`
	`Vlan : 2`
	`Mac Address : 01:02:02:02:02:02`
	`Receive Port :`
	`Member Ports : Gi0/1`
	`Status : Permanent`
	`----------`
	`Total Mac Addresses displayed: 1`

At Switch2:	

18	View the multicast group entries in the switch.
	`aos# show mac-address table`
	`Vlan Mac Address Type Ports`
	`------- --------- -------- --------`
	`1 00:01:02:03:04:02 Learnt Gi0/2`
	`2 00:01:02:03:04:02 Learnt Gi0/2`
	`2 01:02:02:02:02:02 Learnt Gi0/2`
	`Total Mac Addresses displayed: 2`

Configuring Restricted Group Registration

For configuring Restricted Group registration, complete the following.

Configuration guidelines

- Enable the interface P2 in Switch1 and Switch2.
- Configure static multicast entry.
- Configure Restricted Group registration.

Procedure

Execute the following commands in the switches.

Step	Action
At Switch1:	
1	Enter into the Global configuration mode. `aos# configure terminal`
2	Enter into the Interface configuration mode. `aos(config)# interface gigabitethernet 0/1`
3	Make the interface up. `aos(config-if)# no shutdown`
4	Return to Global configuration mode. `aos(config-if)# exit`
5	Enter into the Interface configuration mode. `aos(config)# interface gigabitethernet 0/2`
6	Make the interface up. `aos(config-if)# no shutdown`
7	Return to Global configuration mode. `aos(config-if)# exit`
8	Configure VLAN 2 in the switch. `aos(config)# vlan 2`
9	Configure the static VLAN entry with the required ports. `aos(config-vlan)# ports gigabitethernet 0/1-2`
10	Return to Global configuration mode. `aos(config-vlan)# exit`
12	Create the static multicast entry. `aos(config)# mac-address-table static multicast 01:02:02:02:02:02 VLAN 21 interface gigabitethernet 0/1`
12	Return to Privileged EXEC mode. `aos(config)# end`
At Switch 2:	
13	Enter into the Global configuration mode. `aos# configure terminal`
14	Enter into the Interface configuration mode. `aos(config)# interface gigabitethernet 0/2`
15	Make the interface up. `aos(config-if)# no shutdown`
16	Return to Global configuration mode. `aos(config-if)# exit`
Enable Restricted Group registration in Switch 2.	
17	Enter into the Global configuration mode. `aos# configure terminal`
18	Enter into the Interface configuration mode. `aos(config)# interface gigabitethernet 0/2`

Step	Action
19	Enable Restricted Group registration on a port. `aos(config-if)# group restricted enable`
20	Return to Privileged EXEC mode. `aos(config-if)# end`

21	View the status by executing the following command:
	`aos# show vlan port config port gigabitethernet 0/2`
	`Vlan Port configuration table`
	`----------`
	`Port Gi0/2`
	`Port Vlan ID : 1`
	`Port Acceptable Frame Type : Admit All`
	`Port Ingress Filtering : Disabled`
	`Port Mode : Hybrid`
	`Port Gvrp Status : Enabled`
	`Port Gmrp Status : Enabled`
	`Port Gvrp Failed Registrations : 0`
	`Gvrp last pdu origin : 00:01:02:03:04:02`
	`Port Restricted Vlan Registration : Disabled`
	`Port Restricted Group Registration: Enabled`
	`Mac Based Support : Disabled`
	`Port-and-Protocol Based Support : Enabled`
	`Default Priority : 0`
	`----------`

22	View the group entries by using the command:
	`aos# show mac-address-table`
	`Vlan Mac Address Type Ports`
	`------- --------- ------- -------`
	`1 00:01:02:03:04:02 Learnt Gi0/2`
	`2 00:01:02:03:04:02 Learnt Gi0/2`
	
	`Total Mac Addresses displayed: 1`
	Note: Group entry (01:02:02:02:02:02) is not present in Switch2.

Forward–All

To work with Forward-All, configure the following.

Configuration guidelines

- Configure VLAN.
- Configure forward-all entry.
- Configure forward-unregistered entry.

Procedure

Execute the following commands in Switch1:

Step	Action
1	Enter into the Global configuration mode. `aos# configure terminal`
2	Configure VLAN 2 in the switch. `aos(config)# vlan 2`
3	Configure the static VLAN entry with the required ports. `aos(config-vlan)# ports gigabitethernet 0/1-3`
4	Configure Forward-Unregistered static ports as none for this VLAN. `aos(config-vlan)# forward-unregistered static-ports none`
5	Configure Forward-All static port as Host B. `aos(config-vlan)# forward-all static-ports gigabitethernet 0/2`

Step	Action
6	Exit from VLAN configuration mode. `aos(config-vlan)# exit`
7	Enter into the Interface configuration mode. `aos(config)# interface gigabitethernet 0/1`
8	Make the interface up. `aos(config-if)# no shutdown`
9	Exit from Interface configuration mode. `aos(config-if)# exit`
10	Enter into the Interface configuration mode. `aos(config)# interface gigabitethernet 0/2`
11	Make the interface up. `aos(config-if)# no shutdown`
12	Exit from Interface configuration mode. `aos(config-if)# exit`
13	Enter into the Interface configuration mode. `aos(config)# interface gigabitethernet 0/3`
14	Make the interface up. `aos(config-if)# no shutdown`
15	Exit from Interface configuration mode. `aos(config-if)# exit`
16	Configure the static multicast entry. `aos(config)# mac-address-table static multicast 01:02:02:02:02:02 VLAN 2 recv-port gigabitethernet 0/1 interface gigabitethernet 0/3`
17	Exit from the Global configuration mode. `aos(config)# exit`

18	View the forward-unregistered information by executing the following command:
	`aos# show forward-unregistered`
	`Vlan Forward Unregistered Table`
	`----------`
	`Vlan ID : 2`
	`Unreg ports :`
	`Unreg Static Ports :`
	`Unreg Forbidden Ports :`
	`----------`

19	View the forward-all information by executing the following command:
	`aos# show forward-all`
	`Vlan ID : 2`
	`ForwardAll Ports : Gi0/2`
	`ForwardAll Static Ports : Gi0/2`
	`ForwardAll ForbiddenPorts:`
	`----------`

20	View the static multicast information by executing the following command:
	`aos# show mac-address-table static multicast`
	`Static Multicast Table`
	`----------`
	`Vlan : 2`
	`Mac Address : 01:02:02:02:02:02`
	`Receive Port : Gi0/1`
	`Member Ports : Gi0/3`
	`Status : Permanent`
	`----------`
	`Total Mac Addresses displayed: 1`

Note: After these configurations, the multicast data packets from Host A reaches Host B and Host C with the destination MAC address as 01:02:02:02:02:02.

Classifying VLAN

VLAN is classified as follows:

- PVID based classification
- Port and MAC based classification
- Port and Protocol based classification

PVID based classification

For configuring PVID based classification, complete the following.

Configuration guidelines

- Configure VLAN.
- Configure PVID for ports.

Procedure

Execute the following commands in Switch1.

Step	Action
1	Enter into the Global configuration mode. `aos# configure terminal`
2	Configure VLAN 1 in the switch. `aos(config)# vlan 1`
3	Configure the static VLAN entry with the required ports. `aos(config-vlan)# ports gigabitethernet 0/1-3 untagged gigabitethernet 0/1-3`
4	Exit from VLAN configuration mode. `aos(config-vlan)# exit`
5	Enter into the Interface configuration mode. `aos(config)# interface gigabitethernet 0/1`
6	Make the interface up. `aos(config-if)# no shutdown`
7	Exit from Interface configuration mode. `aos(config-if)# exit`
8	Enter into the Interface configuration mode. `aos(config)# interface gigabitethernet 0/2`
9	Make the interface up. `aos(config-if)# no shutdown`
10	Exit from Interface configuration mode. `aos(config-if)# exit`
11	Enter into the Interface configuration mode. `aos(config)# interface gigabitethernet 0/3`
12	Make the interface up. `aos(config-if)# no shutdown`
13	Exit from Interface configuration mode. `aos(config-if)# exit`
14	Configure VLAN 2 in the switch. `aos(config)# vlan 2`
15	Configure the static VLAN entry with the required ports. `aos(config-vlan)# ports gigabitethernet 0/1-2`
16	Return to Privileged EXEC mode. `aos(config-vlan)# end`

Step	Action
17	Configure the PVID for the Interface P1 as VLAN 2. Enter into the Global configuration mode `aos# configure terminal`
18	Enter into the Interface configuration mode. `aos(config)# interface gigabitethernet 0/1`
19	Set the PVID as 2 for the interface. `aos(config-if)# switchport pvid 2`
20	Return to Privileged EXEC mode. `aos(config-if)# end`

21	View the VLAN related configurations by executing the following commands:
	`aos# show vlan`
	`Vlan database`
	`----------`
	`Vlan ID : 1`
	`Member Ports : Gi0/1, Gi0/2, Gi0/3`
	`Untagged Ports : Gi0/1, Gi0/2, Gi0/3`
	`Forbidden Ports : None`
	`Name :`
	`Status : Permanent`
	`----------`
	`Vlan ID : 2`
	`Member Ports : Gi0/1, Gi0/2`
	`Untagged Ports : None`
	`Forbidden Ports : None`
	`Name :`
	`Status : Permanent`
	`----------`

22	`aos# show vlan port config port gigabitethernet 0/1`
	`Vlan Port configuration table`
	`----------`
	`Port Gi0/1`
	`Port Vlan ID : 2`
	`Port Acceptable Frame Type : Admit All`
	`Port Ingress Filtering : Disabled`
	`Port Mode : Hybrid`
	`Port Gvrp Status : Enabled`
	`Port Gmrp Status : Enabled`
	`Port Gvrp Failed Registrations : 0`
	`Gvrp last pdu origin : 00:00:00:00:00:00`
	`Port Restricted Vlan Registration : Disabled`
	`Port Restricted Group Registration: Disabled`
	`Mac Based Support : Disabled`
	`Port-and-Protocol Based Support : Enabled`
	`Default Priority : 0`
	`----------`

Note: Unicast packets are reached only to Host B as a tagged VLAN2 packet that is sent by Host A.

Port and MAC based classification

For configuring MAC based classification, complete the following.

Configuration guidelines

- Configure VLAN.
- Configure MAC map entry for Port and MAC based classification.

Procedure

Execute the following commands in Switch1.

Step	Action
1	Enter into the Global configuration mode. `aos# configure terminal`
2	Configure VLAN 1 in the switch. `aos(config)# vlan 1`
3	Configure the static VLAN entry with the required ports. `aos(config-vlan)# ports gigabitethernet 0/1-3 untagged gigabitethernet 0/1-3`
4	Exit from VLAN configuration mode. `aos(config-vlan)# exit`
5	Configure VLAN 2 in the switch. `aos(config)# vlan 2`
6	Configure the static VLAN entry with the required ports. `aos(config-vlan)# ports gigabitethernet 0/1-2`
7	Exit from VLAN configuration mode. `aos(config-vlan)# exit`
8	Enter into the Interface configuration mode. `aos(config)# interface gigabitethernet 0/1`
9	Set the PVID as VLAN 1. `aos(config-if)# switchport pvid 1`
10	Make the interface up. `aos(config-if)# no shutdown`
11	Exit from Interface configuration mode. `aos(config-if)# exit`
12	Enter into the Interface configuration mode. `aos(config)# interface gigabitethernet 0/2`
13	Set the PVID as VLAN 1. `aos(config-if)# switchport pvid 1`
14	Make the interface up. `aos(config-if)# no shutdown`
15	Exit from Interface configuration mode. `aos(config-if)# exit`
16	Enter into the Interface configuration mode. `aos(config)# interface gigabitethernet 0/3`
17	Set the PVID as VLAN 1. `aos(config-if)# switchport pvid 1`
18	Make the interface up. `aos(config-if)# no shutdown`
19	Return to Privileged EXEC mode. `aos(config-vlan)# end`
20	Configure the Mac map entry. Enter into the Global configuration mode: `aos# configure terminal`
21	Enter into the Interface configuration mode. `aos(config)# interface gigabitethernet 0/1`
22	Create the Mac map entry. `aos(config-if)# mac-map 00:11:22:33:44:0a VLAN 2 mcast-bcast allow`
23	Return to Privileged EXEC mode. `aos(config-if)# end`

Step	Action

24	View the VLAN related configurations by executing the following commands:
	`aos# show vlan`
	`Vlan database`
	`----------`
	`Vlan ID : 1`
	`Member Ports : Gi0/1, Gi0/2, Gi0/3`
	`Untagged Ports : Gi0/1, Gi0/2, Gi0/3`
	`Forbidden Ports : None`
	`Name :`
	`Status : Permanent`
	`----------`
	`Vlan ID : 2`
	`Member Ports : Gi0/1, Gi0/2`
	`Untagged Ports : None`
	`Forbidden Ports : None`
	`Name :`
	`Status : Permanent`
	`----------`

25	`aos# show mac-vlan interface gigabitethernet 0/1`
	`Mac Map Table For Port 1--Mac Vlan Enabled`
	`----------`
	`Mac Address Vlan ID MCast/Bcast`
	`---------- ---------- ----------`
	`00: 11:22:33:44:0a 2 allow`

Note: Untagged unicast packets from Host A are classified as VLAN 2 packets and the packets are forwarded only to Host B.

Port and Protocol based classification

For configuring Port and Protocol based classification, the following are to be done.

Configuration guidelines

- Configure VLAN.
- Configure protocol-group entry for Port and Protocol based classification.

Procedure

Execute the following commands in Switch1.

Step	Action
1	Enter into the Global configuration mode. `aos# configure terminal`
2	Configure VLAN 1 in the switch. `aos(config)# vlan 1`
3	Configure the static VLAN entry with the required ports. `aos(config-vlan)# ports gigabitethernet 0/1-3 untagged gigabitethernet 0/1-3`
4	Exit from VLAN configuration mode. `aos(config-vlan)# exit`
5	Configure VLAN 2 in the switch. `aos(config)# vlan 2`
6	Configure the static VLAN entry with the required ports. `aos(config-vlan)# ports gigabitethernet 0/1-2`
7	Exit from VLAN configuration mode. `aos(config-vlan)# exit`
8	Enter into the Interface configuration mode. `aos(config)# interface gigabitethernet 0/1`
9	Set the PVID as VLAN 1. `aos(config-if)# switchport pvid 1`

Step	Action
10	Make the interface up. `aos(config-if)# no shutdown`
11	Exit from Interface configuration mode. `aos(config-if)# exit`
12	Enter into the Interface configuration mode. `aos(config)# interface gigabitethernet 0/2`
13	Set the PVID as VLAN 1. `aos(config-if)# switchport pvid 1`
14	Make the interface up. `aos(config-if)# no shutdown`
15	Exit from Interface configuration mode. `aos(config-if)# exit`
16	Enter into the Interface configuration mode. `aos(config)# interface gigabitethernet 0/3`
17	Set the PVID as VLAN 1. `aos(config-if)# switchport pvid 1`
18	Make the interface up. `aos(config-if)# no shutdown`
19	Return to Privileged EXEC mode. `aos(config-vlan)# end`
20	Configure the Protocol-Group entry. Enter into the Global configuration mode. `aos# configure terminal`
21	Create protocol-group entry `aos(config)# map protocol other 08:06 enet-v2 protocols-group 100`
22	Enter into the Interface configuration mode. `aos(config)# interface gigabitethernet 0/1`
23	Map the protocol-group entry to the VLAN. `aos(config-if)# switchport map protocols-group 100 vlan 2`
24	Return to Privileged EXEC mode. `aos(config-if)# end`

25	View the VLAN related configurations by executing the following commands:
	`aos# show vlan`
	`Vlan database`
	`-------------------`
	`Vlan ID : 1`
	`Member Ports : Gi0/1, Gi0/2, Gi0/3`
	`Untagged Ports : Gi0/1, Gi0/2, Gi0/3`
	`Forbidden Ports : None`
	`Name :`
	`Status : Permanent`
	`-----------------------------------------------------`
	`Vlan ID : 2`
	`Member Ports : Gi0/1, Gi0/2`
	`Untagged Ports : None`
	`Forbidden Ports : None`
	`Name :`
	`Status : Permanent`
	`-----------------------------------------------------`
	`aos# show vlan protocols-group`
	`Protocol Group Table`
	`------------------------------`
	`-----------------------------------------------------`
	`Frame Type Protocol Group`
	`-----------------------------------------------------`
	`Enet-v2 08:06 100`
	`-----------------------------------------------------`

Step	Action

26	`aos# show protocol-vlan`
	`Port Protocol Table`
	`----------`
	`Port  Group  Vlan ID`
	`----------`
	`Gi0/1  100  2`
	`----------`

Note: ARP packets (Unknown Host) from Host A are classified as VLAN 2 packets and the packets are forwarded only to Host B.

Configuring Acceptable Frame Types

To work with Acceptable Frame types, configure the following.

Configuration guidelines

- Configuration of VLAN.
- Configuration of PVID for the interfaces.
- Configuration of Acceptable Frame types.

Procedure

Execute the following commands in Switch1.

Step	Action
1	Enter into the Global configuration mode. `aos# configure terminal`
2	Configure VLAN 1 in the switch. `aos(config)# vlan 1`
3	Configure the static VLAN entry with the required ports. `aos(config-vlan)# ports gigabitethernet 0/1-2 untagged gigabitethernet 0/1-2`
4	Return from VLAN Configuration mode. `aos(config-vlan)# exit`
5	Enter into the Interface configuration mode. `aos(config)# interface gigabitethernet 0/1`
6	Make the interface up. `aos(config-if)# no shutdown`
7	Set PVID as VLAN 1. `aos(config-if)# switchport pvid 1`
8	Return from Interface configuration mode. `aos(config-if)# exit`
9	Enter into the Interface configuration mode. `aos(config)# interface gigabitethernet 0/2`
10	Make the interface up. `aos(config-if)# no shutdown`
11	Set PVID as VLAN 2. `aos(config-if)# switchport pvid 1`
12	Return to Privileged EXEC mode. `aos(config-if)# end`
13	Wait for around 30 seconds (topology settlement), to initiate ping from Host A to Host B, which is successful.
14	Configure the Acceptable Frame Type for port P1. Enter into the Global configuration mode. `aos# configure terminal`

Step	Action
15	Enter into the Interface configuration mode. `aos(config)# interface gigabitethernet 0/1`
16	Configure the Acceptable Frame Type. `aos(config-if)# switchport acceptable-frame-type tagged`
17	Return to Privileged EXEC mode. `aos(config-vlan)# end`

18	View the VLAN related configurations by executing the following commands:
	`aos# show vlan`
	`Vlan database`
	`----------`
	`Vlan ID : 1`
	`Member Ports : Gi0/1, Gi0/2`
	`Untagged Ports : Gi0/1, Gi0/2`
	`Forbidden Ports : None`
	`Name :`
	`Status : Permanent`
	`----------`

19	`aos# show vlan port config port gigabitethernet 0/1`
	`Vlan Port configuration table`
	`----------`
	`Port Gi0/1`
	`Port Vlan ID : 1`
	`Port Acceptable Frame Type : Admit Only Vlan Tagged`
	`Port Ingress Filtering : Disabled`
	`Port Mode : Hybrid`
	`Port Gvrp Status : Enabled`
	`Port Gmrp Status : Enabled`
	`Port Gvrp Failed Registrations : 0`
	`Gvrp last pdu origin : 00:00:00:00:00:00`
	`Port Restricted Vlan Registration: Disabled`
	`Port Restricted Group Registration: Disabled`
	`Mac Based Support : Disabled`
	`Port-and-Protocol Based Support :Enabled`
	`Default Priority : 0`
	`----------`

Note: Once the Acceptable Frame Type is configured as Admit Only VLAN Tagged, the ping fails (as ping packets are untagged) from Host A to Host B.

Configuring Ingress Filtering

To work with Ingress Filtering, the following are to be done.

Configuration guidelines

- Configuration of VLAN.
- Configuration of PVID for the interfaces.
- Configuration of Ingress filtering.

Procedure

Execute the following commands in Switch1.

Step	Action
1	Enter into the Global configuration mode. `aos# configure terminal`
2	Configure VLAN 2 in the switch. `aos(config)# vlan 2`
3	Configure the static VLAN entry with the required ports. `aos(config-vlan)# ports gigabitethernet 0/2 untagged gigabitethernet 0/2`

Step	Action
4	Return from VLAN Configuration mode. `aos(config-vlan)# exit`
5	Enter into the Interface configuration mode. `aos(config)# interface gigabitethernet 0/1`
6	Make the interface up. `aos(config-if)# no shutdown`
7	Set PVID as VLAN 2. `aos(config-if)# switchport pvid 2`
8	Return from Interface configuration mode. `aos(config-if)# exit`
9	Enter into the Interface configuration mode. `aos(config)# interface gigabitethernet 0/2`
10	Make the interface up. `aos(config-if)# no shutdown`
11	Set PVID as VLAN 2. `aos(config-if)# switchport pvid 2`
12	Return to Privileged EXEC mode. `aos(config-if)# end`
13	Wait for around 30 seconds (topology settlement) to initiate ping from Host A to Host B, and the ARP packet reaches Host B.
14	Enable Ingress filtering in port P1 as follows: Enter into the Global configuration mode. `aos# configure terminal`
15	Enter into the Interface configuration mode `aos(config)# interface gigabitethernet 0/1`
16	Configure the Ingress filter. `aos(config-if)# switchport ingress-filter`
17	Return to Privileged EXEC mode. `aos(config-vlan)# end`

18	View the VLAN related configurations by executing the following commands:
	`aos# show vlan`
	`Vlan database`
	`----------`
	`Vlan ID : 2`
	`Member Ports : Gi0/2`
	`Untagged Ports : Gi0/2`
	`Forbidden Ports : None`
	`Name :`
	`Status : Permanent`
	`----------`

19	`aos# show vlan port config port gigabitethernet 0/1`
	`Vlan Port configuration table`
	`----------`
	`Port Gi0/1`
	`Port Vlan ID : 2`
	`Port Acceptable Frame Type : Admit All`
	`Port Ingress Filtering : Enabled`
	`Port Mode : Hybrid`
	`Port Gvrp Status : Enabled`
	`Port Gmrp Status : Enabled`
	`Port Gvrp Failed Registrations : 0`
	`Gvrp last pdu origin : 00:00:00:00:00:00`
	`Port Restricted Vlan Registration : Disabled`
	`Port Restricted Group Registration: Disabled`
	`Mac Based Support : Disabled`
	`Port-and-Protocol Based Support : Enabled`
	`Default Priority : 0`
	`----------`

Note: The APR packet reaches Host B, when the Ingress filtering is enabled.

Chapter 7. Flow Based Provider Bridge Configuration

Figure 6: Dot1ad Bridge Configuration Topology

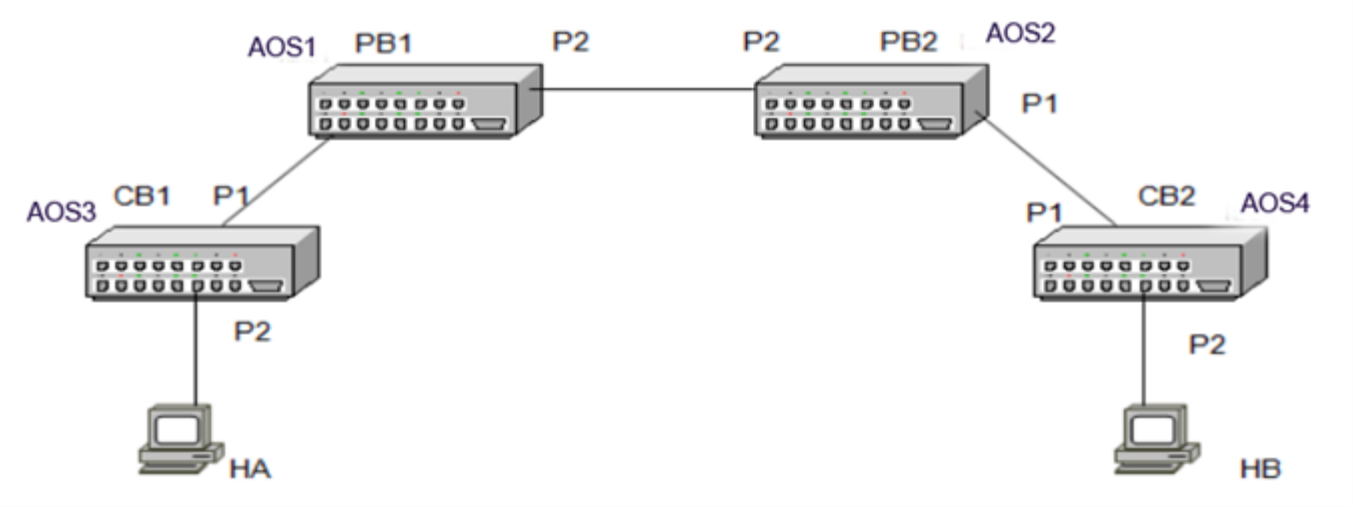

Switch AOS1 (PB1):

- MAC Address: 00:01:02:03:04:01
- VLAN 1 - 10.0.0.1/255.0.0.0

Switch AOS2 (PB2):

- MAC Address: 00:02:02:03:04:01
- VLAN 1 – 10.0.0.2 /255.0.0.0

Switch AOS3 (CB1):

- MAC Address: 00:03:02:03:04:01
- VLAN 1 – 10.0.0.10/255.0.0.0

Switch AOS4 (CB2):

- MAC Address: 00:04:02:03:04:01
- VLAN 1 – 10.0.0.20/255.0.0.0

Host HA:

- IP Address – 10.0.0.100/255.0.0.0

Host HB:

- IP Address – 10.0.0.200/255.0.0.0.

In this chapter

Configuring Service Using C-VLAN Based Service Interface and Port-Based Service Interface 92
Translating VLAN in Provider Networks 97
Configuring PCP Decoding and Encoding Table 100
Configuring Provider Edge Port Configurations and Service Priority Regeneration Table 101
Tunneling Of Customer STP Packets and Customer GVRP Protocol Packets – Provider Bridges 103
Tunneling of Dot1x Protocol in Provider Bridges 107
Tunneling Of Customer STP Packets and Customer GVRP Protocol Packets – Customer Bridges 111
Tunneling of Dot1x Protocol in Customer Bridges 116
Tunnelling Over Q-in-Q Bridge 120
Port-Based MAC Address Limiting 122
VLAN-Based MAC Address Limiting 123

Configuring Service Using C-VLAN Based Service Interface and Port-Based Service Interface

Configuration guidelines

- Configure C-VLAN based Service Interface (Configure Customer Edge Port) and Port based Service Interface (configuration of Customer Network Port (Port-Based) as follows.
- Configure the C-VLAN based service using C-VID registration table.
- Configure the Port based service by setting PVID for the Customer Network Port (Port-Based).
- Configuration of S-VLAN.

Default configurations

By default, all ports are configured as “Provider Network Port” in PB1 and PB2.

Procedure

Configure P1 of PB1 as Customer Edge Port and Configure P1 of PB2 as Customer Network Port (Port-Based).

Step	Action
At Switch PB1	
1	Enter into the Global configuration mode. `aos# configure terminal`
2	Enter into the Interface configuration mode. `aos# interface gigabitethernet 0/1`
3	Configure the port P1 as Customer Edge Port. `aos(config-if)# bridge port-type  customerEdgePort`
4	Exit from the Global configuration mode `aos(config-if)#end`
At Switch PB2	
5	Enter into the Global configuration mode. `aos# configure terminal`

Step	Action
6	Enter into the Interface configuration mode. `aos(config)# interface gigabitethernet 0/1`
7	Configure the port P1 as Customer Edge Port. `aos(config-if)# bridge port-type customerNetworkPort port-based`
8	Exit from the Global configuration mode. `aos(config-if)#end`

Configure the S-VLAN 2 with member ports as P1, P2 and untagged port as P1 in both PB1 and PB2.

Step	Action
At Switch PB1	
9	Enter into the Global configuration mode. `aos# configure terminal`
10	Enter into the VLAN configuration mode. `aos(config)# vlan 2`
11	Configure the port P1, P2 as member ports and P1 as untagged port for S-VLAN 2. `aos(config-vlan)# ports gigabitethernet0/1,0/2 untagged gigabitethernet0/1`
12	Exit from the VLAN configuration mode. `aos(config-vlan)#end`
At Switch PB2	
13	Enter into the Global configuration mode. `aos# configure terminal`
14	Enter into the VLAN configuration mode. `aos(config)# vlan 2`
15	Configure the port P1, P2 as member ports and P1 as untagged port for S-VLAN 2. `aos(config-vlan)# ports gigabitethernet0/1,0/2 untagged gigabitethernet0/1`
16	Exit from the VLAN configuration mode. `aos(config-vlan)#end`

Configure the CVID Registration table for providing C-VLAN based service.

Step	Action
At Switch PB1	
17	Enter into the Global configuration mode. `aos# configure terminal`
18	Enter into the Interface configuration mode. `aos(config)# interface gigabitethernet 0/1`
19	Configure the CVID Registration table for S-VLAN 2 and C-VLAN 2. `aos(config-if)# switchport customer-vlan 2 service-vlan 2`
20	Exit from the Interface configuration mode. `aos(config-if)#end`

Configure the VLAN 2 with member ports as P1, P2 with untagged ports as P1 in both CB1 and CB2.

Step	Action
At Switch CB1	
21	Enter into the Global configuration mode. `aos# configure terminal`
22	Enter into the VLAN configuration mode. `aos(config)# vlan 2`

Step	Action
23	Configure the port P1, P2 as member ports and untagged member port as P2 for VLAN 2. `aos(config-vlan)# ports gigabitethernet 0/1,0/2 untagged gigabitethernet0/2`
24	Exit from the VLAN configuration mode. `aos(config-vlan)#end`
At Switch CB2	
25	Enter into the Global configuration mode. `aos# configure terminal`
26	Enter into the VLAN configuration mode. `aos(config)# vlan 2`
27	Configure the port P1, P2 as member ports and untagged member port as P2 for VLAN 2. `aos(config-vlan)# ports gigabitethernet 0/1,0/2 untagged gigabitethernet0/2`
28	Exit from the VLAN configuration mode. `aos(config-vlan)#end`

Configure the PVID for port P2 on CB1 and CB2 as VLAN 2 and configure the PVID of Port P1 on PB2 as VLAN 2.

Step	Action
At Switch PB2	
29	Enter into the Global configuration mode. `aos# configure terminal`
30	Enter into the Interface configuration mode. `aos(config)# interface gigabitethernet 0/1`
31	Configure the PVID of the port P1 as S-VLAN 2. `aos(config-if)# switchport pvid 2`
32	Exit from the Interface configuration mode. `aos(config-if)#end`
At Switch CB1	
33	Enter into the Global configuration mode. `aos# configure terminal`
34	Enter into the Interface configuration mode. `aos(config)# interface gigabitethernet 0/2`
35	Configure the PVID of the port P2 as VLAN 2. `aos(config-if)# switchport pvid 2`
36	Exit from the Interface configuration mode. `aos(config-if)#end`
At Switch CB2	
37	Enter into the Global configuration mode. `aos# configure terminal`
38	Enter into the Interface configuration mode. `aos(config)# interface gigabitethernet 0/2`
39	Configure the PVID of the port P2 as VLAN 2. `aos(config-if)# switchport pvid 2`
40	Exit from the Interface configuration mode. `aos(config-if)#end`
At Switch PB1	

41	View the configured port types by executing the following command:
	`aos# show provider-bridge port config port gigabitethernet 0/1`
	`Provider Bridge Port configuration table`
	`----------`
	`Port Gi0/1`
	`Port Type : Customer Edge Port`

Step	Action

	`Dot1x Protocol Tunnel Status : Peer`
	`LACP Protocol Tunnel Status : Peer`
	`Spanning Tree Tunnel Status : Peer`
	`GVRP Protocol Tunnel Status : Discard`
	`GMRP Protocol Tunnel Status : Discard`
	`IGMP Protocol Tunnel Status : Discard`
	`Service Vlan Classification : Customer Vlan`
	`Ingress EtherType : 0x88a8`
	`Egress EtherType : 0x8100`
	`EtherType Swap Status : Disable`
	`Service Vlan Translation Status : Disable`
	`Require Drop Encoding : False`
	`Use_Dei : False`
	`PCP Selection Row : 8P0D`
	`Unicast Mac Learning Status : Enable`
	`Unicast Mac Learning Limit : 150`
	`Customer Vlan : 1`
	`Customer Vlan Status : Enabled`
	`---------- ----------`

42	View the VLAN configurations by executing the following command:
	`aos# show vlan`
	`Vlan database`
	`----------`
	`Vlan ID : 1`
	`Member Ports :`
	`Untagged Ports : None`
	`Forbidden Ports : None`
	`Name :`
	`Status : Permanent`
	`ServiceType : E-LAN`
	`MacLearning Status : Enabled`
	`----------`
	`Vlan ID : 2`
	`Member Ports : Gi0/1, Gi0/2`
	`Untagged Ports : Gi0/1`
	`Forbidden Ports : None`
	`Name :`
	`Status : Permanent`
	`ServiceType : E-LAN`
	`MacLearning Status : Enabled`
	`----------`

43	View the C-VLAN based service configuration by executing the following command:
	`aos# show service vlan cvlan`
	`Service Vlan Classification`
	`----------`
	`Service Vlan Port Customer Vlan Untag-pep Untag-cep Relay CVlan Id SVLAN Pri Type SVLAN Priority`
	`---------- ----------`
	`2 Gi0/1 2 False False 2 NONE NA`

At Switch PB2	

44	View the configured port types by executing the following command:
	`aos# show provider-bridge port config port gigabitethernet 0/1`
	`Provider Bridge Port configuration table`
	`----------`
	`Port Gi0/1`
	`Port Type : Customer Network Port(Port-Based)`
	`Dot1x Protocol Tunnel Status : Peer`
	`LACP Protocol Tunnel Status : Peer`
	`Spanning Tree Tunnel Status : Tunnel`
	`GVRP Protocol Tunnel Status : Tunnel`
	`GMRP Protocol Tunnel Status : Tunnel`
	`IGMP Protocol Tunnel Status : Tunnel`
	`Service Vlan Classification : PVID`
	`Ingress EtherType : 0x88a8`

Step	Action

	`Egress EtherType : 0x88a8`
	`EtherType Swap Status : Disable`
	`Service Vlan Translation Status : Disable`
	`Require Drop Encoding : False`
	`Use_Dei : False`
	`PCP Selection Row : 8P0D`
	`Unicast Mac Learning Status : Enable`
	`Unicast Mac Learning Limit : 150`
	`----------`

45	Verify the VLAN configuration by executing the following command:
	`aos# show vlan`
	`Vlan database`
	`----------`
	`Vlan ID : 1`
	`Member Ports :`
	`Untagged Ports : None`
	`Forbidden Ports : None`
	`Name :`
	`Status : Permanent`
	`ServiceType : E-LAN`
	`MacLearning Status : Enabled`
	`----------`
	`Vlan ID : 2`
	`Member Ports : Gi0/1, Gi0/2`
	`Untagged Ports : Gi0/1`
	`Forbidden Ports : None`
	`Name :`
	`Status : Permanent`
	`ServiceType : E-LAN`
	`MacLearning Status : Enabled`

At Switch CB1	

46	Verify the VLAN configuration by executing the following command:
	`aos# show vlan`
	`Vlan database`
	`----------`
	`Vlan ID : 1`
	`Member Ports : Gi0/1, Gi0/2, Gi0/3, Gi0/4, Gi0/5, Gi0/6`
	`Gi0/7, Gi0/8, Gi0/9, Gi0/10, Gi0/11, Gi0/12`
	`Gi0/13, Gi0/14, Gi0/15, Gi0/16, Gi0/17, Gi0/18`
	`Gi0/19, Gi0/20, Gi0/21, Gi0/22, Gi0/23, Gi0/24`
	`Untagged Ports : Gi0/1, Gi0/2, Gi0/3, Gi0/4, Gi0/5, Gi0/6`
	`Gi0/7, Gi0/8, Gi0/9, Gi0/10, Gi0/11, Gi0/12`
	`Gi0/13, Gi0/14, Gi0/15, Gi0/16, Gi0/17, Gi0/18`
	`Gi0/19, Gi0/20, Gi0/21, Gi0/22, Gi0/23, Gi0/24`
	`Forbidden Ports : None`
	`Name :`
	`Status : Permanent`
	`----------`
	`Vlan ID : 2`
	`Member Ports : Gi0/1, Gi0/2`
	`Untagged Ports : Gi0/2`
	`Forbidden Ports : None`
	`Name :`
	`Status : Permanent`

47	Verify the Spanning Tree configuration by executing the following command:
	`aos# show spanning-tree`
	`Root Id Priority 32768`
	`Address 00:03:02:03:04:01`
	`Cost 0`
	`Port 0 [0]`
	`This bridge is the root`
	`Max age 20 Sec, forward delay 15 Sec`

Step	Action
	MST00 MST00 is executing the mstp compatible Multiple Spanning Tree Protocol Bridge Id Priority 32768 Address 00:03:02:03:04:01 Max age is 20 sec, forward delay is 15 sec Name Role State Cost Prio Type ---- ---- ----- ---- ---- ----- Gi0/1 Designated Forwarding 200000 128 SharedLan Gi0/2 Designated Forwarding 200000 128 SharedLan
At Switch CB2	
48	Verify the VLAN configuration by executing the following command: aos# show vlan Vlan database ---------- Vlan ID : 1 Member Ports : Gi0/1, Gi0/2, Gi0/3, Gi0/4, Gi0/5, Gi0/6 Gi0/7, Gi0/8, Gi0/9, Gi0/10, Gi0/11, Gi0/12 Gi0/13, Gi0/14, Gi0/15, Gi0/16, Gi0/17, Gi0/18 Gi0/19, Gi0/20, Gi0/21, Gi0/22, Gi0/23, Gi0/24 Untagged Ports : Gi0/1, Gi0/2, Gi0/3, Gi0/4, Gi0/5, Gi0/6 Gi0/7, Gi0/8, Gi0/9, Gi0/10, Gi0/11, Gi0/12 Gi0/13, Gi0/14, Gi0/15, Gi0/16, Gi0/17, Gi0/18 Gi0/19, Gi0/20, Gi0/21, Gi0/22, Gi0/23, Gi0/24 Forbidden Ports : None Name : Status : Permanent ---------- Vlan ID : 2 Member Ports : Gi0/1, Gi0/2 Untagged Ports : Gi0/2 Forbidden Ports : None Name : Status : Permanent
49	Verify the Spanning Tree configuration by executing the following command: aos# show spanning-tree Root Id Priority 32768 Address 00:03:02:03:04:01 Cost 400000 Port 1 [Gi0/1] Max age 20 Sec, forward delay 15 Sec MST00 MST00 is executing the mstp compatible Multiple Spanning Tree Protocol Bridge Id Priority 32768 Address 00:04:02:03:04:01 Max age is 20 sec, forward delay is 15 sec Name Role State Cost Prio Type ---- ---- ----- ---- ---- ------ Gi0/1 Root Forwarding 200000 128 SharedLan Gi0/2 Designated Forwarding 200000 128 SharedLan

Translating VLAN in Provider Networks

Configuration Guidelines

- Configuration of VID Translation table.
- Configuration of Port based Service by setting PVID for the Customer Network Port Port-Based.
- Configuration of S-VLAN.

Default configurations

By default, all the ports are configured, as “Provider Network Port” in PB1 and PB2 and Local VID is equal to Relay VID in the VID Translation table.

Procedure

Step	Action
At Switch PB1	

1	Configure port P1 as **customerNetworkPort port-based**.
	`aos# configure terminal`
	`aos#(config) interface gigabitethernet 0/1`
	`aos(config-if)# bridge port-type customerNetworkPort port-based`
	`aos(config-if)#end`

At Switch PB2	

2	Configure port P1 as **customerNetworkPort port-based**.
	`aos# configure terminal`
	`aos#(config) interface gigabitethernet 0/1`
	`aos(config-if)# bridge port-type customerNetworkPort port-based`
	`aos(config-if)#end`

At Switch PB1	

3	Create VLAN 2 with member ports as P1, P2 and untagged member ports as P1 in PB1. Note that you can only do this for a VLAN without an IP address.
	`aos# configure terminal`
	`aos# vlan 2`
	`aos(config-vlan)# ports gigabitethernet 0/1,0/2 untagged gigabitethernet 0/1`
	`aos(config-vlan)#end`

4	Create VLAN 3 with member ports as P1, P2 and untagged member ports as P1 in PB1.
	`aos# configure terminal`
	`aos(config)# vlan 3`
	`aos(config-vlan)# ports gigabitethernet 0/1,0/2 untagged gigabitethernet 0/1`
	`aos(config-vlan)#end`

5	Configure the VID Translation table for port P2 in PB1 as Local VID-3, Relay VID-2.
	`aos# configure terminal`
	`aos(config)# interface gigabitethernet 0/2`

6	Configure the VID Translation table for port P2 as Local VID-3, Relay VID-2.
	`aos(config-if)# switchport service vlan mapping 3 2`
	`aos(config-if)#end`

At switch CB1	

7	Create VLAN 2 with member ports as P1, P2, with p2 as untagged member port Configure the PVID for port P2 as VLAN 2.
	`aos# configure terminal`
	`aos(config)# vlan 2`
	`aos(config-vlan)#ports gigabitethernet 0/1,0/2 untagged gigabitethernet 0/2`
	`aos(config-vlan)#exit`
	`aos(config)# interface gigabitethernet 0/2`
	`aos(config-if)#switchport pvid 2`
	`aos(config-if)#end`

Step	Action
At switch CB2	

8	Create VLAN 2 with member ports as P1, P2, with p2 as untagged member port
	Configure the PVID for port P2 as VLAN 2.
	`aos# configure terminal`
	`aos(config)# vlan 2`
	`aos(config-vlan)#ports gigabitethernet 0/1,0/2 untagged gigabitethernet 0/2`
	`aos(config-vlan)#exit`
	`aos(config)# interface gigabitethernet 0/2`
	`aos(config-if)#switchport pvid 2`
	`aos(config-if)#end`

At switch PB1	

9	Configure the PVID for port P1 as VLAN 2 in PB1.
	`aos# configure terminal`
	`aos(config)# interface gigabitethernet 0/1`
	`aos(config-if)#switchport pvid 2`
	`aos(config-if)#end`

At switch PB2	

10	Configure the PVID for port P1 as VLAN 3 in PB2.
	`aos# configure terminal`
	`aos(config)# interface gigabitethernet 0/1`
	`aos(config-if)#switchport pvid 3`
	`aos(config-if)#end`

At Switch PB1	

11	Verify the configuration of VID Translation table by executing the following command:
	`aos# show service vlan mapping`
	`Service VLAN Mapping`
	`----------`
	`Port Gi0/2`
	`----------`
	`Local service VLAN  Relay service VLAN 2`

At Switch CB1	

12	Verify whether, the customer network has been settled properly by executing the following command:
	`aos# show spanning-tree`
	`Root Id  Priority  32768`
	`Address  00:03:02:03:04:01`
	`Cost  0`
	`Port  0 [0]`
	`This bridge is the root`
	`Max age 20 Sec, forward delay 15 Sec`
	`MST00`
	`MST00 is executing the mstp compatible Multiple Spanning Tree Protocol`
	`Bridge Id  Priority  32768`
	`Address  00:03:02:03:04:01`
	`Max age is 20 sec, forward delay is 15 sec`
	`Name  Role  State  Cost  Prio  Type`
	`----  ----  -----  ----  ----  ----`
	`Gi0/1  Designated  Forwarding  200000  128  SharedLan`
	`Gi0/2  Designated  Forwarding  200000  128  SharedLan`

At Switch CB2	

13	Verify whether, the customer network has been settled properly by executing the following command:
	`aos# show spanning-tree`
	`Root Id  Priority  32768`
	`Address  00:03:02:03:04:01`
	`Cost  200000`

Step	Action

	`Port 1 [Gi0/1]`
	`Max age 20 Sec, forward delay 15 Sec`
	`MST00`
	`MST00 is executing the mstp compatible Multiple Spanning Tree Protocol`
	`Bridge Id Priority 32768`
	`Address 00:04:02:03:04:01`
	`Max age is 20 sec, forward delay is 15 sec`
	`Name Role State Cost Prio Type`
	`---- ---- ----- ---- ---- ----`
	`Gi0/1 Root Forwarding 200000 128 SharedLan`
	`Gi0/2 Designated Forwarding 200000 128 SharedLan`

Note: A Ping from Host A to Host B is successful, indicating that VLAN translation is successfully taking place.

Configuring PCP Decoding and Encoding Table

Configuration guidelines

- Configure port types.
- Configure PCP Encoding and Decoding table.
- Configure S-VLAN.

Default configurations

All ports are Provider Network ports by default.

Procedure

Execute the following commands at Switch PB1.

Step	Action

1	Configure Port P1 as Customer Network Port (Port-Based).
	`aos# configure terminal`
	`aos(config)# interface gigabitethernet 0/1`
	`aos(config-if)# bridge port-type customerNetworkPort port-based`
	`aos(config-if)# end`

2	Configure the PCP selection row for port P1 and P2 as 7P1D.
	`aos# configure terminal`
	`aos(config)# interface gigabitethernet 0/1`

3	Configure the PCP selection row for port P1 as 7P1D.
	`aos(config-if)# switchport provider-bridge pcp-selection-row 7P1D`
	`aos(config-if)# exit`
	`aos(config)# interface gigabitethernet 0/2`

4	Configure the PCP selection row for port P2 as 7P1D.
	`aos(config-if)# switchport provider-bridge pcp-selection-row 7P1D`
	`aos(config-if)# end`

5	Configure the PCP decoding table for the received PCP value 5 to be decoded as priority 6 and drop-eligible true in Port P1 of PB1.
	`aos# configure terminal`
	`aos(config)# interface gigabitethernet 0/1`

6	Configure the PCP decoding table for the Port P1 as PCP - 5, Priority – 6 and DE - True.
	`aos(config-if)# pcp-decoding 7P1D pcp 5 priority 6 drop-eligible true`
	`aos(config-if)# end`

7	Configure the PCP encoding table for the Port P2 as priority - –6, drop-eligible - true, the PCP value as 5.
	`aos# configure terminal`
	`aos(config)# interface gigabitethernet 0/2`

Step	Action

8	PCP encoding table for the priority 6 drop-eligible true, the PCP value as 5.
	`aos(config-if)# pcp-encoding 7P1D priority 6 drop-eligible true pcp 5`
	`aos(config-if)# end`

9	View the PCP encoding/decoding table configurations by executing the following command.
	`aos# show provider-bridge pcp decoding port gigabitethernet 0/1`
	`Port Gi0/1`
	`-----------`
	`PCP  : 0  1  2  3  4  5  6  7`
	`----------`
	`8POD  : 0  1  2  3  4  5  6  7`
	`7P1D  : 0  1  2  3  4DE  6DE  6  7`
	`6P2D  : 0  1  2DE  2  4DE  4  6  7`
	`5P3D  : 0DE  0  2DE  2  4DE  4  6  7`

10	View the PCP encoding/decoding table configurations by executing the following command.
	`aos# show provider-bridge pcp encoding port gigabitethernet 0/2`
	`Port Gi0/2`
	`-----------`
	`DropEligible: 0 0DE 1 1DE 2 2DE 3 3DE 4 4DE 5 5DE 6 6DE 7 7DE`
	`Priority  :`
	`----------`
	`8POD  : 0  0  1  1  2  2  3  3  4  4  5  5  6  6  7  7`
	`7P1D  : 0  0  1  1  2  2  3  3  5  4  5  4  6  5  7  7`
	`6P2D  : 0  0  1  1  3  2  3  2  5  4  5  4  6  6  7  7`
	`5P3D  : 1  0  1  0  3  2  3  2  5  4  5  4  6  6  7  7`

11	Create VLAN 2 with member ports as P1 and P2.
	`aos# configure terminal`
	`aos(config)# vlan 2`
	`aos(config-vlan)# ports gigabitethernet 0/1,0/2`
	`aos(config-vlan)# end`

12	Send a VLAN 2 tagged packet with priority as 5 from Host A to port P1 of PB1.
13	Verify that the packet is sent out with VLAN 2 tag and priority 5 on port P2 of PB1.

Configuring Provider Edge Port Configurations and Service Priority Regeneration Table

Configuration guidelines

- Configure port types.
- Configure S-VLAN.
- Configure PEP configurations.
- Configure Service Priority Regeneration table configuration.

Default configurations

All ports are Provider Network ports by default.

Provider Edge Port has the following default values:

- PVID – CVID of the first customer VLAN assigned to this service.
- User Priority – 0
- Acceptable Frame Types – AdmitAll
- Enable Ingress Filtering – Disabled.
- Service Priority Regeneration table has receive-priority equal to regenerated priority.

Procedure

Execute the following commands at Switch PB1.

Step	Action

1	Configure port P1 as Customer Edge Port.
	`aos# configure terminal`
	`aos(config)# interface gigabitethernet 0/1`
	`aos(config-if)# bridge port-type customerEdgePort`
	`aos(config-if)# no shutdown`
	`aos(config-if)# exit`
	`aos(config)# interface gigabitethernet 0/2`
	`aos(config-if)# no shutdown`
	`aos(config-if)# exit`

2	Configure the S-VLAN membership.
	`aos# configure terminal`
	`aos(config)# vlan 2`
	`aos(config-vlan)# ports gigabitethernet 0/1-2 untagged gigabitethernet 0/1`
	`aos(config-vlan)# end`

3	Create Provider Edge port and configure Provider Edge port configurations.
	`aos# configure terminal`
	`aos(config)# interface gigabitethernet 0/1`
	`aos(config-if)#switchport customer-vlan 2 service-vlan 2`

4	Configure PVID for Provider Edge port (P1, S-VLAN2). `aos(config-if)#service-vlan 2 pvid 2`

5	Configure Ingress filter for Provider Edge port (P1, S-VLAN2)
	`aos(config-if)#service-vlan 2 ingress-filter enable`
	`aos(config-if)#end`

6	Configure Service Priority Regeneration table for the internal CNP (P1, S-VLAN2).
	`aos# configure terminal`
	`aos(config)# interface gigabitethernet 0/1`

7	Configure Service Priority Regeneration table for the Internal Customer Network port (P1, S-VLAN 2).
	`aos(config-if)#service-vlan 2 recv-priority 2 regen-priority 3`
	`aos(config)# end`

8	Provider Edge port configuration is viewed as:
	`aos# show provider-bridge pep configuration`
	`Provider Edge Port configuration`
	`----------`
	`Port Gi0/1`
	`Service VLAN-ID : 2`
	`Port VLAN-ID : 2`
	`Acceptable Frame Type : Admit all`
	`Ingress Filtering : Enabled`
	`Default Priority : 0`
	`Oper status : Up`
	`Service Priority Regeneration table configuration is viewed as:`
	`aos# show provider-bridge priority regen`
	`Service Priority Regeneration table`
	`----------`
	`Port : Gi0/1 Service VLAN-ID : 2`
	`Receive Priority Regenerated Priority`
	`---------- ----------`
	`0 0`
	`1 1`
	`2 3`
	`3 3`
	`4 4`
	`5 5`
	`6 6`
	`7 7`

Step	Action
	A unicast C-VLAN 2 tagged packet with priority 2 that is sent from Host A reaches Host B as a double tagged packet with priority in the outertag as 3”.

Tunneling Of Customer STP Packets and Customer GVRP Protocol Packets – Provider Bridges

This section describes the tunneling of Customer Spanning Tree Protocol packets and Customer GVRP protocol packets at provider bridges present in the provider network.

Configuration guidelines

- Configure the ports as customer ports (access ports).
- Disable Spanning Tree on port, where STP tunneling is required.
- Set the STP tunneling.
- Disable GVRP on port, where GVRP tunneling is required.
- Set the GVRP tunneling.
- Configure the service interfaces.
- Configure the S-VLAN.

Default configurations

All ports are configured as “Provider Network ports” by default.

Procedure

Configure port P1 of PB1 as Customer Edge Port and port P1 of PB2 as Customer Network Port (Port-Based).

Step	Action
At Switch PB1	
1	aos# configure terminal aos# interface gigabitethernet 0/1 aos(config-if)# bridge port-type customerEdgePort aos(config-if)#end
At Switch PB2	
2	aos# configure terminal aos# interface gigabitethernet 0/1 aos(config-if)# bridge port-type customerNetworkPort port-based aos(config-if)#end

Create VLAN 2 with member ports as P1, P2 and untagged member port as P1 in both PB1 and PB2 bridges.

Step	Action
At Switch PB1	
3	aos# configure terminal aos(config)# vlan 2 aos(config-vlan)# ports gigabitethernet 0/1,0/2 untagged gigabitethernet 0/1 aos(config-vlan)#end
At Switch PB2	
4	aos# configure terminal aos(config)# vlan 2 aos(config-vlan)# ports gigabitethernet 0/1,0/2 untagged gigabitethernet 0/1 aos(config-vlan)#end

Configure the CVID Registration table for the port P1 in PB1 as “C-VLAN 2, S-VLAN 2”. This results in creating the PEP for S-VLAN 2 in the C-VLAN component.

Step	Action
At Switch PB1	

5	`aos# configure terminal`
	`aos(config)# interface gigabitethernet 0/1`
	`aos(config-if)# switchport customer-vlan 2 service-vlan 2`
	`aos(config-vlan)#end`

At Switch PB2	

6	Configure the port PVID of P1 in PB2 as VLAN 2.
	`aos# configure terminal`
	`aos(config)# interface gigabitethernet 0/1`
	`aos(config-if)# switchport pvid 2`
	`aos(config-if)#end`

Disable the Spanning Tree on port P1 and configure the CPVID for the port P1 as VLAN 2.

Step	Action
At Switch PB1	
7	`aos# configure terminal` `aos(config)# interface gigabitethernet 0/1`
8	Disable the Spanning Tree on port P1. `aos(config-if)# spanning-tree disable`

9	Configure the CPVID as 2 for the port P1.
	`aos(config-if)# switchport Dot1q customer PB`
	`aos(config-if)#end`

Configure the tunnel status for STP, GVRP as “tunnel” in port P1 of PB1. In Customer Network ports, the tunnel protocol status for STP and GVRP are “tunnel” by default. So, there is no need for configuring tunnel status in PB2.

Step	Action
At Switch PB1	
10	`aos# configure terminal` `aos(config)# interface gigabitethernet 0/1`
11	Enable the tunnel status of STP in port P1. `aos(config-if)# l2protocol-tunnel stp`

12	Enable the tunnel status of GVRP in port P1.
	`aos(config-if)# l2protocol-tunnel gvrp`
	`aos(config-if)#end`

Create the VLAN 2 with member port as P2 and untagged member port as P2 in both CB1 and CB2. Also configure the PVID of the port P2 as VLAN 2 in CB1 and CB2.

Step	Action
At Switch CB1	

13	`aos# configure terminal`
	`aos(config)# vlan 2`
	`aos(config-vlan)#ports gigabitethernet 0/2 untagged gigabitethernet 0/2`
	`aos(config-vlan)# exit`
	`aos(config)#interface gigabitethernet 0/2`
	`aos(config-if)#switchport pvid 2`
	`aos(config-if)#end`

Step	Action
	At Switch CB2

14	`aos# configure terminal`
	`aos(config)# vlan 2`
	`aos(config-vlan)#ports gigabitethernet 0/2 untagged gigabitethernet 0/2`
	`aos(config-vlan)# exit`
	`aos(config)#interface gigabitethernet 0/2`
	`aos(config-if)#switchport pvid 2`
	`aos(config-if)#end`

Now, the VLAN 2 is learned on the port P1 of CB1 and CB2, and port P1 is the root port of the Customer Network-Spanning Tree.

Step	Action
	At Switch PB1

15	Verify that the Customer Spanning Tree is disabled.
	`aos# show customer spanning-tree`
	`Port [Gi0/1] Root Id  Priority  0`
	`Address  00:00:00:00:00:00`
	`Cost  0`
	`Root Ports`
	`Hello Time 2 Sec, Max Age 20 Sec, Forward Delay 15 Sec`
	
	`Customer Spanning tree Protocol has been disabled`
	`Bridge Id  Priority 0`
	`Address 00:01:02:03:04:01`
	`Hello Time 2 sec, Max Age 0 sec, Forward Delay 15 sec`
	`Name  Role  State  Cost  Prio  Type`
	`----  ----  -----  ----  ----  -----`
	`PEP-Service:2  Disabled  Unknown  128  32  SharedLan`
	`CEP-Gi0/1  Disabled  Unknown  200000 32  SharedLan`
	`----------`

16	Verify that the STP and GVRP tunnel status are configured as “tunnel”.
	`aos# show provider-bridge port config port gigabitethernet 0/1`
	`Provider Bridge Port configuration table`
	`----------`
	`Port Gi0/1`
	`Port Type  : Customer Edge Port`
	`Dot1x Protocol Tunnel Status  : Peer`
	`LACP Protocol Tunnel Status  : Peer`
	`Spanning Tree Tunnel Status  : Tunnel`
	`GVRP Protocol Tunnel Status  : Tunnel`
	`GMRP Protocol Tunnel Status  : Discard`
	`IGMP Protocol Tunnel Status  : Discard`
	`Service Vlan Classification  : Customer Vlan`
	`Ingress EtherType  : 0x88a8`
	`Egress EtherType  : 0x8100`
	`EtherType Swap Status  : Disable`
	`Service Vlan Translation Status  : Disable`
	`Require Drop Encoding  : False`
	`Use_Dei  : False`
	`PCP Selection Row  : 8P0D`
	`Unicast Mac Learning Status  : Enable`
	`Unicast Mac Learning Limit  : 150`
	`Customer Vlan  : 2`
	`Customer Vlan Status  : Enabled`
	`----------`

	At Switch CB1

17	Verify the Spanning Tree port roles and states by executing the following command:
	`aos# show spanning-tree`
	`Root Id  Priority  32768`
	`Address  00:03:02:03:04:01`

Step	Action

	`Cost 0`
	`Port 0 [0]`
	`This bridge is the root`
	`Max age 20 Sec, forward delay 15 Sec`
	
	`MST00`
	`MST00 is executing the mstp compatible Multiple Spanning Tree Protocol`
	`Bridge Id Priority 32768`
	`Address 00:03:02:03:04:01`
	`Max age is 20 sec, forward delay is 15 sec`
	`Name Role State Cost Prio Type`
	`---- ---- ----- ---- ---- ------`
	`Gi0/1 Designated Forwarding 200000 128 SharedLan`
	`Gi0/2 Designated Forwarding 200000 128 SharedLan`

18	Verify the VLAN configuration by executing the following command:
	`aos# show vlan`
	`VLAN database`
	`----------`
	`VLAN ID : 1`
	`Member Ports : Gi0/1, Gi0/2, Gi0/3, Gi0/4, Gi0/5, Gi0/6`
	`Gi0/7, Gi0/8, Gi0/9, Gi0/10, Gi0/11, Gi0/12`
	`Gi0/13, Gi0/14, Gi0/15, Gi0/16, Gi0/17, Gi0/18`
	`Gi0/19, Gi0/20, Gi0/21, Gi0/22, Gi0/23, Gi0/24`
	`Untagged Ports : Gi0/1, Gi0/2, Gi0/3, Gi0/4, Gi0/5, Gi0/6`
	`Gi0/7, Gi0/8, Gi0/9, Gi0/10, Gi0/11, Gi0/12`
	`Gi0/13, Gi0/14, Gi0/15, Gi0/16, Gi0/17, Gi0/18`
	`Gi0/19, Gi0/20, Gi0/21, Gi0/22, Gi0/23, Gi0/24`
	`Forbidden Ports : None`
	`Name :`
	`Status : Permanent`
	`----------`
	`VLAN ID : 2`
	`Member Ports : Gi0/1, Gi0/2`
	`Untagged Ports : Gi0/2`
	`Forbidden Ports : None`
	`Name :`
	`Status : Permanent`

At Switch CB2	

19	Verify the spanning tree port roles and states by executing the following command:
	`aos# show spanning-tree`
	`Root Id Priority 32768`
	`Address 00:03:02:03:04:01`
	`Cost 200000`
	`Port 1 [Gi0/1]`
	`Max age 20 Sec, forward delay 15 Sec`
	
	`MST00`
	`MST00 is executing the mstp compatible Multiple Spanning Tree Protocol`
	`Bridge Id Priority 32768`
	`Address 00:04:02:03:04:01`
	`Max age is 20 sec, forward delay is 15 sec`
	`Name Role State Cost Prio Type`
	`---- ---- ----- ---- ---- ----`
	`Gi0/1 Root Forwarding 200000 128 SharedLan`
	`Gi0/2 Designated Forwarding 200000 128 SharedLan`

20	Verify the VLAN configuration by executing the following command:
	`aos# show VLAN`
	`VLAN database`
	`----------`
	`VLAN ID : 1`
	`Member Ports : Gi0/1, Gi0/2, Gi0/3, Gi0/4, Gi0/5, Gi0/6`
	`Gi0/7, Gi0/8, Gi0/9, Gi0/10, Gi0/11, Gi0/12`
	`Gi0/13, Gi0/14, Gi0/15, Gi0/16, Gi0/17, Gi0/18`

Step	Action

	`Gi0/19, Gi0/20, Gi0/21, Gi0/22, Gi0/23, Gi0/24`
	`Untagged Ports : Gi0/1, Gi0/2, Gi0/3, Gi0/4, Gi0/5, Gi0/6`
	`Gi0/7, Gi0/8, Gi0/9, Gi0/10, Gi0/11, Gi0/12`
	`Gi0/13, Gi0/14, Gi0/15, Gi0/16, Gi0/17, Gi0/18`
	`Gi0/19, Gi0/20, Gi0/21, Gi0/22, Gi0/23, Gi0/24`
	`Forbidden Ports : None`
	`Name :`
	`Status : Permanent`
	`----------`
	`VLAN ID : 2`
	`Member Ports : Gi0/1, Gi0/2`
	`Untagged Ports : Gi0/2`
	`Forbidden Ports : None`
	`Name :`
	`Status : Permanent`

Ping from Host A to Host B. The ping is successful.

Tunneling of Dot1x Protocol in Provider Bridges

Configuration guidelines

- Configure the bridge mode for PB1 and PB2 as Provider Core Bridges.
- Configure the bridge mode for CB1 and CB2 as Customer Bridges.
- Disable Dot1x on all the provider bridges.
- Set the Dot1x tunneling
- Configure Dot1x authenticator and supplicant in both the customer bridges.
- Configure the S-VLAN.

Default configurations

- All ports are configured as “Provider Network Ports” by default.
- Dot1x is enabled in all bridges by default.
- Supplicant authorizes the username and password by default as given below:
  - Username – guest
  - Password – future

Procedure

Configure port P1 of PB1 and PB2 as “Customer Network Port (Port Based)”.

Step	Action
At switch PB1	

1	`aos#configure terminal`
	`aos(config)# interface gigabitethernet 0/1`
	`aos(config-if)# bridge port-type customerNetworkPort port-based`
	`aos(config-if)# end`

At switch PB2	

2	`aos#configure terminal`
	`aos(config)# interface gigabitethernet 0/1`
	`aos(config-if)# bridge port-type customerNetworkPort port-based`
	`aos(config-if)# end`

Configure the Dot1x module status as disabled on both PB1 and PB2.

Step	Action
At Switch PB1	

3	Disable Dot1x module status.
	`aos#configure terminal`
	`aos(config)# no dot1x system-auth-control`
	`aos(config)#end`

At Switch PB2	

4	Disable Dot1x module status.
	`aos#configure terminal`
	`aos(config)# no dot1x system-auth-control`
	`aos(config)#end`

Configure the Dot1x tunnel status for port P1 as “tunnel” in both PB1 and PB2.

Step	Action
At Switch PB1	

5	`aos#configure terminal`
	`aos(config)# interface gigabitethernet 0/1`
	`aos(config-if)# l2protocol-tunnel dot1x`
	`aos(config-if)#end`

At Switch PB2	

6	`aos#configure terminal`
	`aos(config)# interface gigabitethernet 0/1`
	`aos(config-if)# l2protocol-tunnel dot1x`
	`aos(config-if)#end`

Create VLAN 2 with member ports as P1, P2 and untagged member port as P1 on both PB1 and PB2. Configure PVID of the port P1 as VLAN 2 in both PB1 and PB2.

Step	Action
At Switch PB1	

7	`aos#configure terminal`
	`aos(config)# vlan 2`
	`aos(config-vlan)# ports gigabitethernet 0/1,0/2 untagged gigabitethernet 0/1`
	`aos(config-vlan)#exit`
	`aos(config)# interface gigabitethernet 0/1`
	`aos(config-if)#switchport pvid 2`
	`aos(config-if)#end`

At Switch PB2	

8	`aos#configure terminal`
	`aos(config)# vlan 2`
	`aos(config-vlan)# ports gigabitethernet 0/1 untagged gigabitethernet 0/1`
	`aos(config-vlan)#exit`
	`aos(config)# interface gigabitethernet 0/1`
	`aos(config-if)#switchport pvid 2`
	`aos(config-if)#end`

Configure the authenticator and supplicant in both CB1 and CB2.

Step	Action
At Switch CB1	

9	`aos#configure terminal`
	`aos(config)# dot1x local-database guest password future permission allow`
	`aos(config)#interface gigabitethernet 0/1`
	`aos(config-if)# dot1x port-control auto`
	`aos(config-if)#end`

Step	Action
At Switch CB2	

10	`aos#configure terminal`
	`aos(config)# dot1x local-database guest password future permission allow`
	`aos(config)#interface gigabitethernet 0/1`
	`aos(config-if)# dot1x port-control auto`
	`aos(config-if)#end`

Verify the above configurations in all the switches.

Step	Action
At Switch PB1	

11	Verify that the Dot1x module status is disabled by executing the following command:
	`aos# show dot1x`
	`Sysauthcontrol = Disabled`
	`Module Oper Status = Disabled`
	`Dot1x Protocol Version = 2`
	`Dot1x Authentication Method = Local`
	`Nas ID = fsNas1`

12	View the port type configuration and Dot1x tunnel status configuration by executing the following command:
	`aos# show provider-bridge port config port gigabitethernet 0/1`
	`Provider Bridge Port configuration table`
	`----------`
	`Port Gi0/1`
	`Port Type : Customer Network Port(Port-Based)`
	`Dot1x Protocol Tunnel Status : Tunnel`
	`LACP Protocol Tunnel Status : Peer`
	`Spanning Tree Tunnel Status : Tunnel`
	`GVRP Protocol Tunnel Status : Tunnel`
	`GMRP Protocol Tunnel Status : Tunnel`
	`IGMP Protocol Tunnel Status : Tunnel`
	`Service VLAN Classification : PVID`
	`Ingress EtherType : 0x88a8`
	`Egress EtherType : 0x88a8`
	`EtherType Swap Status : Disable`
	`Service VLAN Translation Status : Disable`
	`Require Drop Encoding : False`
	`Use_Dei : False`
	`PCP Selection Row : 8P0D`
	`Unicast Mac Learning Status : Enable`
	`Unicast Mac Learning Limit : 150`
	`----------`

At Switch PB2	

13	Verify that the Dot1x module status is disabled by executing the following command:
	`aos# show dot1x`
	`Sysauthcontrol = Disabled`
	`Module Oper Status = Disabled`
	`Dot1x Protocol Version = 2`
	`Dot1x Authentication Method = Local`
	`Nas ID = fsNas1`
	`View the Port Type configuration and Dot1x Tunnel Status configuration by executing the following command`
	`aos# show provider-bridge port config port gigabitethernet 0/1`
	`Provider Bridge Port configuration table`
	`----------`
	`Port Gi0/1`
	`Port Type : Customer Network Port(Port-Based)`
	`Dot1x Protocol Tunnel Status : Tunnel`
	`LACP Protocol Tunnel Status : Peer`
	`Spanning Tree Tunnel Status : Tunnel`
	`GVRP Protocol Tunnel Status : Tunnel`

Step	Action

	`GMRP Protocol Tunnel Status : Tunnel`
	`IGMP Protocol Tunnel Status : Tunnel`
	`Service VLAN Classification : PVID`
	`Ingress EtherType : 0x88a8`
	`Egress EtherType : 0x88a8`
	`EtherType Swap Status : Disable`
	`Service VLAN Translation Status : Disable`
	`Require Drop Encoding : False`
	`Use_Dei : False`
	`PCP Selection Row : 8P0D`
	`Unicast Mac Learning Status : Enable`
	`Unicast Mac Learning Limit : 150`
	`----------`

At Switch CB1	

14	Verify the Dot1x local database by executing the following command:
	`aos# show dot1x local-database`
	`Pnac Authentication Users Database`
	`----------`
	`User name : guest`
	`Protocol : 4`
	`Timeout : 0 seconds`
	`Ports Gi0/1, Gi0/2, Gi0/3, Gi0/4, Gi0/5, Gi0/6`
	`Gi0/7, Gi0/8, Gi0/9, Gi0/10, Gi0/11, Gi0/12`
	`Gi0/13, Gi0/14, Gi0/15, Gi0/16, Gi0/17, Gi0/18`
	`Gi0/19, Gi0/20, Gi0/21, Gi0/22, Gi0/23, Gi0/24`
	`Permission : Allow`

15	Verify that the port status is authorized by executing the following command:
	`aos# show dot1x interface gigabitethernet 0/1`
	`Dot1x Info for Gi0/1`
	`----------`
	`PortStatus = AUTHORIZED`
	`AccessControl = INACTIVE`
	`AuthSM State = AUTHENTICATED`
	`SuppSM State = AUTHENTICATED`
	`BendSM State = IDLE`
	`AuthPortStatus = AUTHORIZED`
	`SuppPortStatus = AUTHORIZED`
	`AdminControlDirection = BOTH`
	`OperControlDirection = BOTH`
	`MaxReq = 2`
	`Port Control = Auto`
	`QuietPeriod = 60 Seconds`
	`Re-authentication = Disabled`
	`ReAuthPeriod = 3600 Seconds`
	`ServerTimeout = 30 Seconds`
	`SuppTimeout = 30 Seconds`
	`Tx Period = 30 Seconds`

At Switch CB2	

16	Verify the dot1x local database by executing the following command:
	`aos# show dot1x local-database`
	`Pnac Authentication Users Database`
	`----------`
	`User name : guest`
	`Protocol : 4`
	`Timeout : 0 seconds`
	`Ports Gi0/1, Gi0/2, Gi0/3, Gi0/4, Gi0/5, Gi0/6`
	`Gi0/7, Gi0/8, Gi0/9, Gi0/10, Gi0/11, Gi0/12`
	`Gi0/13, Gi0/14, Gi0/15, Gi0/16, Gi0/17, Gi0/18`
	`Gi0/19, Gi0/20, Gi0/21, Gi0/22, Gi0/23, Gi0/24`
	`Permission : Allow`

17	Verify that the port status is authorized by executing the following command: `aos# show dot1x interface gigabitethernet 0/1`

Step	Action

	`Dot1x Info for Gi0/1`
	`----------`
	`PortStatus = AUTHORIZED`
	`AccessControl = INACTIVE`
	`AuthSM State = AUTHENTICATED`
	`SuppSM State = AUTHENTICATED`
	`BendSM State = IDLE`
	`AuthPortStatus = AUTHORIZED`
	`SuppPortStatus = AUTHORIZED`
	`AdminControlDirection = BOTH`
	`OperControlDirection = BOTH`
	`MaxReq = 2`
	`Port Control = Auto`
	`QuietPeriod = 60 Seconds`
	`Re-authentication = Disabled`
	`ReAuthPeriod = 3600 Seconds`
	`ServerTimeout = 30 Seconds`
	`SuppTimeout = 30 Seconds`
	`Tx Period = 30 Seconds`

Tunneling Of Customer STP Packets and Customer GVRP Protocol Packets – Customer Bridges

This section describes the tunneling of Customer STP packets and Customer GVRP protocol packets at Customer bridges present in the provider network.

Configuration guidelines

- Disable Spanning Tree on port where STP tunneling is required.
- Disable GVRP on port where GVRP tunneling is required.
- Set the STP tunneling and GVRP tunneling.
- Configure S-VLAN

Default configurations

All bridges AOS1, AOS2, AOS3 and ISS4 will be configured as customer bridges.

Procedure

Create VLAN 2 with member ports as P1, P2 and untagged member port as P1 in both AOS1 and AOS2 bridges.

Step	Action
At Switch AOS1	

1	`aos# configure terminal`
	`aos(config)# vlan 2`
	`aos(config-vlan)# ports gigabitethernet 0/1,0/2 untagged gigabitethernet 0/1`
	`aos(config-vlan)#end`

At Switch AOS2	

2	`aos# configure terminal`
	`aos(config)# vlan 2`
	`aos(config-vlan)# ports gigabitethernet 0/1,0/2 untagged gigabitethernet 0/1`
	`aos(config-vlan)#end`

Configure the port PVID of P1 in AOS1 and AOS2 as VLAN 2.

Step	Action
At Switch AOS1	

3	`aos# configure terminal`
	`aos(config)# interface gigabitethernet 0/1`
	`aos(config-if)# switchport pvid 2`
	`aos(config-if)#end`

At Switch AOS2	

4	`aos# configure terminal`
	`aos(config)# interface gigabitethernet 0/1`
	`aos(config-if)# switchport pvid 2`
	`aos(config-if)#end`

Disable Spanning Tree on port P1 of both AOS1 and AOS2.

Step	Action
At Switch AOS1	

5	Disable the Spanning Tree on port P1.
	`aos# configure terminal`
	`aos(config)# interface gigabitethernet 0/1`
	`aos(config-if)# spanning-tree disable`
	`aos(config-if)#end`

At Switch AOS2	

6	Disable the Spanning Tree on port P1.
	`aos# configure terminal`
	`aos(config)# interface gigabitethernet 0/1`
	`aos(config-if)# spanning-tree disable`
	`aos(config-if)#end`

Disable the GVRP Protocol on Port P1 of both AOS1 and AOS2.

Step	Action
At Switch AOS1	

7	Disable the GVRP protocol on port P1.
	`aos# configure terminal`
	`aos(config)# switch default`
	`aos(config-default)# set port gvrp gigabitethernet 0/1 disable`
	`aos(config-default)#end`

At Switch AOS2	

8	Disable the GVRP protocol on port P1.
	`aos# configure terminal`
	`aos(config)# switch default`
	`aos(config-default)# set port gvrp gigabitethernet 0/1 disable`
	`aos(config-default)#end`

Configure the tunnel status for STP, GVRP as “tunnel” in port P1 of AOS1 and AOS2.

Step	Action
At Switch AOS1	

9	Configure the tunnel status of STP in port P1.
	`aos# configure terminal`
	`aos(config)# interface gigabitethernet 0/1`
	`aos(config-if)# l2protocol-tunnel stp`

10	Configure the tunnel status of GVRP in port P1.
	`aos(config-if)# l2protocol-tunnel gvrp`
	`aos(config-if)#end`

Step	Action
At Switch AOS2	

11	Enable the tunnel status of STP in port P1.
	`aos# configure terminal`
	`aos(config)# interface gigabitethernet 0/1`
	`aos(config-if)# l2protocol-tunnel stp`

12	Enable the tunnel status of GVRP in port P1.
	`aos(config-if)# l2protocol-tunnel gvrp`
	`aos(config-if)#end`

Create VLAN 2 with member port as P2 and untagged member port as P2 in both AOS3 and ISS4. Also configure the PVID of the port P2 as VLAN 2 in AOS3 and ISS4.

Step	Action
At Switch AOS3	

13	`aos# configure terminal`
	`aos(config)# vlan 2`
	`aos(config-vlan)#ports gigabitethernet 0/2 untagged gigabitethernet 0/2`
	`aos(config-vlan)# exit`
	`aos(config)#interface gigabitethernet 0/2`
	`aos(config-if)#switchport pvid 2`
	`aos(config-if)#end`

At Switch ISS4	

14	`aos# configure terminal`
	`aos(config)# vlan 2`
	`aos(config-vlan)#ports gigabitethernet 0/2 untagged gigabitethernet 0/2`
	`aos(config-vlan)# exit`
	`aos(config)#interface gigabitethernet 0/2`
	`aos(config-if)#switchport pvid 2`
	`aos(config-if)#end`

At the end of these configuration VLAN 2 is learnt on port P1 of AOS3 and ISS4, and port P1 is the root port of the Customer Network-Spanning Tree (AOS3 and ISS4).

Step	Action
At Switch AOS1	

15	`aos# show spanning-tree`
	`Switch default`
	`Root Id  Priority  32768`
	`Address  00:01:02:03:04:01`
	`Cost  0`
	`Port  0 [0]`
	`This bridge is the root`
	`Max age 20 Sec, forward delay 15 Sec`
	
	`MST00`
	`MST00 is executing the mstp compatible Multiple Spanning Tree Protocol`
	`Bridge Id  Priority  32768`
	`Address  00:01:02:03:04:01`
	`Max age is 20 sec, forward delay is 15 sec`
	`Name  Role  State  Cost  Prio  Type`
	`----  ----  -----  ----  ----  -----`
	`Gi0/1  Disabled  Forwarding  200000  128  SharedLan`
	`Gi0/2  Designated Forwarding  200000  128  SharedLan`

16	Execute the following show command to view that the STP and GVRP protocol tunnel status is configured as 'tunnel' in AOS1.
	`aos# show vlan port config  port gigabitethernet 0/1`
	`Switch default`
	`Vlan Port configuration table`
	`----------`

Step	Action
	Port Gi0/1 Port Vlan ID : 1 Port Acceptable Frame Type : Admit All Port Ingress Filtering : Disabled Port Mode : Hybrid Port Gvrp Status : Enabled Port Gmrp Status : Enabled Port Gvrp Failed Registrations : 0 Gvrp last pdu origin : 00:00:00:00:00:00 Port Restricted Vlan Registration : Disabled Port Restricted Group Registration : Disabled Mac Based Support : Disabled Port-and-Protocol Based Support : Enabled Default Priority : 0 Dot1x Protocol Tunnel Status : Peer LACP Protocol Tunnel Status : Peer Spanning Tree Tunnel Status : Tunnel GVRP Protocol Tunnel Status : Tunnel GMRP Protocol Tunnel Status : Peer IGMP Protocol Tunnel Status : Peer ----------
At Switch AOS2	
17	aos# show spanning-tree Switch default Root Id Priority 32768 Address 00:01:02:03:04:01 Cost 200000 Port 2 [Gi0/2] Max age 20 Sec, forward delay 15 Sec MST00 MST00 is executing the mstp compatible Multiple Spanning Tree Protocol Bridge Id Priority 32768 Address 00:02:02:03:04:01 Max age is 20 sec, forward delay is 15 sec Name Role State Cost Prio Type ---- ---- ----- ---- ---- ----- Gi0/1 Disabled Forwarding 200000 128 SharedLan Gi0/2 Root Forwarding 200000 128 SharedLan
18	Execute the following show command to view that the STP and GVRP protocol tunnel status is configured as 'tunnel' in AOS2. aos# show vlan port config port gigabitethernet 0/1 Switch default Vlan Port configuration table ---------- Port Gi0/1 Port Vlan ID : 1 Port Acceptable Frame Type : Admit All Port Ingress Filtering : Disabled Port Mode : Hybrid Port Gvrp Status : Enabled Port Gmrp Status : Enabled Port Gvrp Failed Registrations : 0 Gvrp last pdu origin : 00:00:00:00:00:00 Port Restricted Vlan Registration : Disabled Port Restricted Group Registration : Disabled Mac Based Support : Disabled Port-and-Protocol Based Support : Enabled Default Priority : 0 Dot1x Protocol Tunnel Status : Peer LACP Protocol Tunnel Status : Peer Spanning Tree Tunnel Status : Tunnel GVRP Protocol Tunnel Status : Tunnel GMRP Protocol Tunnel Status : Peer

Step	Action
	`IGMP Protocol Tunnel Status : Peer` `----------`
At Switch AOS3	

19	Execute the following show command to verify that the Spanning tree has settled in AOS3 by tunneling of STP packets.
	`aos# show spanning-tree`
	`Switch default`
	`Root Id Priority 32768`
	`Address 00:03:02:03:04:01`
	`Cost 0`
	`Port 0 [0]`
	`This bridge is the root`
	`Max age 20 Sec, forward delay 15 Sec`
	`MST00`
	`MST00 is executing the mstp compatible Multiple Spanning Tree Protocol`
	`Bridge Id Priority 32768`
	`Address 00:03:02:03:04:01`
	`- Max age is 20 sec, forward delay is 15 sec`
	`Name Role State Cost Prio Type`
	`---- ---- ----- ---- ---- ------`
	`Gi0/1 Designated Forwarding 200000 128 SharedLan`
	`Gi0/2 Designated Forwarding 200000 128 SharedLan`

20	Verify the VLAN learning happened properly in AOS3 using the following command
	`aos# show vlan`
	`VLAN database`
	`----------`
	`VLAN ID : 1`
	`Member Ports : Gi0/1, Gi0/2`
	`Untagged Ports : Gi0/1, Gi0/2`
	`Forbidden Ports : None`
	`Name :`
	`Status : Permanent`
	`----------`
	`VLAN ID : 2`
	`Member Ports : Gi0/1, Gi0/2`
	`Untagged Ports : Gi0/1`
	`Forbidden Ports : None`
	`Name :`
	`Status : Permanent`

At Switch ISS4	

21	Verify that the Spanning tree has settled in ISS4 by tunneling of STP packets by executing the following command.
	`aos# show spanning-tree`
	`Switch default`
	`Root Id Priority 32768`
	`Address 00:03:02:03:04:01`
	`Cost 200000`
	`Port 2 [Gi0/2]`
	`Max age 20 Sec, forward delay 15 Sec`
	
	`MST00`
	`MST00 is executing the mstp compatible Multiple Spanning Tree Protocol`
	`Bridge Id Priority 32768`
	`Address 00:04:02:03:04:01`
	`Max age is 20 sec, forward delay is 15 sec`
	`Name Role State Cost Prio Type`
	`---- ---- ----- ---- ---- ----`
	`Gi0/1 Root Forwarding 200000 128 SharedLan`
	`Gi0/2 Designated Forwarding 200000 128 SharedLan`

22	Execute the following show command to verify whether VLAN learning happened properly in ISS4. `aos# show vlan`

Step	Action

	`VLAN database`
	`----------`
	`VLAN ID : 1`
	`Member Ports : Gi0/1, Gi0/2`
	`Untagged Ports : Gi0/1, Gi0/2`
	`Forbidden Ports : None`
	`Name :`
	`Status : Permanent`
	`----------`
	`VLAN ID : 2`
	`Member Ports : Gi0/1, Gi0/2`
	`Untagged Ports : Gi0/1`
	`Forbidden Ports : None`
	`Name :`
	`Status : Permanent`

Tunneling of Dot1x Protocol in Customer Bridges

Configuration guidelines

- Configure the bridge mode for all bridges as Customer Bridge.
- Disable Dot1x where DOT1x tunneling in required.
- Set the Dot1x tunneling for port connected to customer network.
- Configure Dot1x authenticator and supplicant.
- Configure S-VLAN.

Default configurations

- Dot1x is enabled in all bridges.
- Supplicant authorizes the username and password by default as given below:
  - Username – guest
  - Password – future

Procedure

Configure the Dot1x module status as disabled on both AOS1 and AOS2.

Step	Action
At Switch AOS1	

1	Disable Dot1x module status.
	`aos#configure terminal`
	`aos(config)# no dot1x system-auth-control`
	`aos(config)#end`

At Switch AOS2	

2	Disable Dot1x module status.
	`aos#configure terminal`
	`aos(config)# no dot1x system-auth-control`
	`aos(config)#end`

Configure the Dot1x tunnel status for port P1 as “tunnel” in both AOS1 and AOS2.

Step	Action
At Switch AOS1	

3	`aos#configure terminal`
	`aos(config)# interface gigabitethernet 0/1`
	`aos(config-if)# l2protocol-tunnel dot1x`
	`aos(config-if)#end`

Step	Action
At Switch AOS2	

4	`aos#configure terminal`
	`aos(config)# interface gigabitethernet 0/1`
	`aos(config-if)# l2protocol-tunnel dot1x`
	`aos(config-if)#end`

Create VLAN 2 with member ports as P1, P2 and untagged member port as P1 on both AOS1 and AOS2. Configure PVID of the port P1 as VLAN 2 in both AOS1 and AOS2.

Step	Action
At Switch AOS1	

5	`aos#configure terminal`
	`aos(config)# vlan 2`
	`aos(config-vlan)# ports gigabitethernet 0/1,0/2 untagged gigabitethernet 0/1`
	`aos(config-vlan)#exit`
	`aos(config)# interface gigabitethernet 0/1`
	`aos(config-if)#switchport pvid 2`
	`aos(config-if)#end`

At Switch AOS2	

6	`aos#configure terminal`
	`aos(config)# vlan 2`
	`aos(config-vlan)# ports gigabitethernet 0/1,0/2 untagged gigabitethernet 0/1`
	`aos(config-vlan)#exit`
	`aos(config)# interface gigabitethernet 0/1`
	`aos(config-if)#switchport pvid 2`
	`aos(config-if)#end`

Configure the authenticator and supplicant in both AOS3 and ISS4.

Step	Action
At Switch AOS3	

7	`aos#configure terminal`
	`aos(config)# dot1x local-database guest password future permission allow`
	`aos(config)#interface gigabitethernet 0/1`
	`aos(config-if)# dot1x port-control auto`
	`aos(config-if)#end`

At Switch ISS4	

8	`aos#configure terminal`
	`aos(config)# dot1x local-database guest password future permission allow`
	`aos(config)#interface gigabitethernet 0/1`
	`aos(config-if)# dot1x port-control auto`
	`aos(config-if)#end`

Execute the following show commands to view the above configurations in all the switches.

Step	Action
At Switch AOS1	

9	View the Dot1x Module status (disabled) by executing the following command:
	`aos# show dot1x`
	`Sysauthcontrol = Disabled`
	`Module Oper Status = Disabled`
	`Dot1x Protocol Version = 2`
	`Dot1x Authentication Method = Local`
	`Nas ID = fsNas1`

10	View the Dot1x Tunnel Status configuration by executing the following command: `aos# show vlan port config port gigabitethernet 0/1`

Step	Action

	`Switch default`
	`Vlan Port configuration table`
	`------------------------------`
	`Port Gi0/1`
	`Port Vlan ID : 1`
	`Port Acceptable Frame Type : Admit All`
	`Port Ingress Filtering : Disabled`
	`Port Mode : Hybrid`
	`Port Gvrp Status : Enabled`
	`Port Gmrp Status : Enabled`
	`Port Gvrp Failed Registrations : 0`
	`Gvrp last pdu origin : 00:00:00:00:00:00`
	`Port Restricted Vlan Registration : Disabled`
	`Port Restricted Group Registration : Disabled`
	`Mac Based Support : Disabled`
	`Port-and-Protocol Based Support : Enabled`
	`Default Priority : 0`
	`Dot1x Protocol Tunnel Status : Peer`
	`LACP Protocol Tunnel Status : Peer`
	`Spanning Tree Tunnel Status : Tunnel`
	`GVRP Protocol Tunnel Status : Tunnel`
	`GMRP Protocol Tunnel Status : Peer`
	`IGMP Protocol Tunnel Status : Peer`
	`-----------------------------------------------------`

At Switch AOS2	

11	View the Dot1x Module status (disabled) by executing the following command:
	`aos# show dot1x`
	`Sysauthcontrol = Disabled`
	`Module Oper Status = Disabled`
	`Dot1x Protocol Version = 2`
	`Dot1x Authentication Method = Local`
	`Nas ID = fsNas1`

12	View the Dot1x Tunnel Status configuration by executing the following command:
	`aos# show vlan port config port gigabitethernet 0/1`
	`Switch default`
	`Vlan Port configuration table`
	`------------------------------`
	`Port Gi0/1`
	`Port Vlan ID : 1`
	`Port Acceptable Frame Type : Admit All`
	`Port Ingress Filtering : Disabled`
	`Port Mode : Hybrid`
	`Port Gvrp Status : Enabled`
	`Port Gmrp Status : Enabled`
	`Port Gvrp Failed Registrations : 0`
	`Gvrp last pdu origin : 00:00:00:00:00:00`
	`Port Restricted Vlan Registration : Disabled`
	`Port Restricted Group Registration : Disabled`
	`Mac Based Support : Disabled`
	`Port-and-Protocol Based Support : Enabled`
	`Default Priority : 0`
	`Dot1x Protocol Tunnel Status : Peer`
	`LACP Protocol Tunnel Status : Peer`
	`Spanning Tree Tunnel Status : Tunnel`
	`GVRP Protocol Tunnel Status : Tunnel`
	`GMRP Protocol Tunnel Status : Peer`
	`IGMP Protocol Tunnel Status : Peer`
	`-----------------------------------------------------`

At Switch AOS3	

13	View the Dot1x local database by executing the following command:
	`aos# show dot1x local-database`
	`Pnac Authentication Users Database`
	`-----------------------------------`

Step	Action

	`User name : guest`
	`Protocol : 4`
	`Timeout : 0 seconds`
	`Ports Gi0/1, Gi0/2, Gi0/3, Gi0/4, Gi0/5, Gi0/6`
	`Gi0/7, Gi0/8, Gi0/9, Gi0/10, Gi0/11, Gi0/12`
	`Gi0/13, Gi0/14, Gi0/15, Gi0/16, Gi0/17, Gi0/18`
	`Gi0/19, Gi0/20, Gi0/21, Gi0/22, Gi0/23, Gi0/24`
	`Permission : Allow`

14	View the port status (authorized) by executing the following command:
	`aos# show dot1x interface gigabitethernet 0/1`
	`Dot1x Info for Gi0/1`
	`----------`
	`PortStatus = AUTHORIZED`
	`AccessControl = INACTIVE`
	
	`AuthSM State = AUTHENTICATED`
	`SuppSM State = AUTHENTICATED`
	`BendSM State = IDLE`
	`AuthPortStatus = AUTHORIZED`
	`SuppPortStatus = AUTHORIZED`
	`AdminControlDirection = BOTH`
	`OperControlDirection = BOTH`
	`MaxReq = 2`
	`Port Control = Auto`
	`QuietPeriod = 60 Seconds`
	`Re-authentication = Disabled`
	`ReAuthPeriod = 3600 Seconds`
	`ServerTimeout = 30 Seconds`
	`SuppTimeout = 30 Seconds`
	`Tx Period = 30 Seconds`

At Switch ISS4	

15	View the dot1x local database by executing the following command:
	`aos# show dot1x local-database`
	`Pnac Authentication Users Database`
	`----------`
	`User name : guest`
	`Protocol : 4`
	`Timeout : 0 seconds`
	`Ports Gi0/1, Gi0/2, Gi0/3, Gi0/4, Gi0/5, Gi0/6`
	`Gi0/7, Gi0/8, Gi0/9, Gi0/10, Gi0/11, Gi0/12`
	`Gi0/13, Gi0/14, Gi0/15, Gi0/16, Gi0/17, Gi0/18`
	`Gi0/19, Gi0/20, Gi0/21, Gi0/22, Gi0/23, Gi0/24`
	`Permission : Allow`

16	View the port status (as authorized) by executing the following command:
	`aos# show dot1x interface gigabitethernet 0/1`
	`Dot1x Info for Gi0/1`
	`----------`
	`PortStatus = AUTHORIZED`
	`AccessControl = INACTIVE`
	
	`AuthSM State = AUTHENTICATED`
	`SuppSM State = AUTHENTICATED`
	`BendSM State = IDLE`
	`AuthPortStatus = AUTHORIZED`
	`SuppPortStatus = AUTHORIZED`
	`AdminControlDirection = BOTH`
	`OperControlDirection = BOTH`
	`MaxReq = 2`
	`Port Control = Auto`
	`QuietPeriod = 60 Seconds`
	`Re-authentication = Disabled`
	`ReAuthPeriod = 3600 Seconds`
	`ServerTimeout = 30 Seconds`

Step	Action
	SuppTimeout = 30 Seconds Tx Period = 30 Seconds

Tunnelling Over Q-in-Q Bridge

Configuration guidelines

- Configuring bridge modes.
- Configuring the port type of the port that is connected to a Q-in-Q bridge as Proprietary Provider Network Port.
- Configuring the S-VLAN.

Default configurations

All ports are configured as “Provider Network Ports” by default.

Procedure

Configure port P1 of PB1 and PB2 as “Proprietary Provider Network Port”.

Step	Action
At switch PB1	
1	aos#configure terminal aos(config)# interface gigabitethernet 0/1 aos(config-if)# bridge port-type propProviderNetworkPort aos(config-if)# end
At switch PB2	
2	aos#configure terminal aos(config)# interface gigabitethernet 0/1 aos(config-if)# bridge port-type propProviderNetworkPort aos(config-if)# end

Configure VLAN 2 with member ports as P1 and untagged member ports as P1 in CB1 and CB2. Also configure the PVID of port P2 as VLAN 2.

Step	Action
At Switch CB1	
3	aos(config)# vlan 2 aos(config-vlan)# ports gigabitethernet 0/1,0/2 untagged gigabitethernet 0/2 aos(config-vlan)# exit aos(config)# interface gigabitethernet 0/1 aos(config-if)# switchport pvid 2 aos(config-if)# end
At Switch CB2	
4	aos(config)# vlan 2 aos(config-vlan)# ports gigabitethernet 0/1,0/2 untagged gigabitethernet 0/2 aos(config-vlan)# exit aos(config)# interface gigabitethernet 0/2 aos(config-if)# switchport pvid 2 aos(config-if)# end

Verify the topology convergence in CB1 and CB2, and VLAN membership propagation in PB1 and PB2.

Step	Action
	At Switch CB1

5	`aos# show spanning-tree`
	`Root Id  Priority  32768`
	`  Address  00:01:02:03:04:01`
	`  Cost  200000`
	`  Port  1 [Gi0/1]`
	`  Max age 20 Sec, forward delay 15 Sec`
	
	`MST00`
	`MST00 is executing the mstp compatible Multiple Spanning Tree Protocol`
	`Bridge Id  Priority  32768`
	`  Address  00:03:02:03:04:01`
	`  Max age is 20 sec, forward delay is 15 sec`
	`Name  Role  State  Cost  Prio  Type`
	`----  ----  -----  ----  ----  ----`
	`Gi0/1 Root  Forwarding  200000  128  SharedLan`
	`Gi0/2 Designated  Forwarding  200000  128  SharedLan`

	At Switch CB2

6	`aos# show spanning-tree`
	`Root Id  Priority  32768`
	`  Address  00:01:02:03:04:01`
	`  Cost  400000`
	`  Port  1 [Gi0/1]`
	`  Max age 20 Sec, forward delay 15 Sec`
	
	`MST00`
	`MST00 is executing the mstp compatible Multiple Spanning Tree Protocol`
	`Bridge Id  Priority  32768`
	`  Address  00:04:02:03:04:01`
	`  Max age is 20 sec, forward delay is 15 sec`
	`Name  Role  State  Cost  Prio  Type`
	`----  ----  -----  ----  ----  -----`
	`Gi0/1  Root  Forwarding  200000  128  SharedLan`
	`Gi0/2 Designated Forwarding 200000  128  SharedLan`

	At Switch PB1

7	`aos# show vlan brief`
	`Vlan database`
	`----------`
	`Vlan ID  : 1`
	`Member Ports  : Gi0/1, Gi0/2`
	`Untagged Ports  : None`
	`Forbidden Ports  : None`
	`Name  :`
	`Status  : Permanent`
	`ServiceType  : E-LAN`
	`MacLearning Status  : Enabled`
	`----------`
	`Vlan ID  : 2`
	`Member Ports  : Gi0/1, Gi0/2`
	`Untagged Ports  : None`
	`Forbidden Ports  : None`
	`Name  :`
	`Status  : Dynamic Gvrp`
	`ServiceType  : E-LAN`
	`MacLearning Status  : Enabled`

Step	Action
	At Switch PB2

8	`aos# show vlan brief`
	`Vlan database`
	`----------`
	`Vlan ID : 1`
	`Member Ports : Gi0/1, Gi0/2`
	`Untagged Ports : None`
	`Forbidden Ports : None`
	`Name :`
	`Status : Permanent`
	`ServiceType : E-LAN`
	`MacLearning Status : Enabled`
	`----------`
	`Vlan ID : 2`
	`Member Ports : Gi0/1, Gi0/2`
	`Untagged Ports : None`
	`Forbidden Ports : None`
	`Name :`
	`Status : Dynamic Gvrp`
	`ServiceType : E-LAN`
	`MacLearning Status : Enabled`

Port-Based MAC Address Limiting

Figure 7: Port Based MAC Address Limiting Topology

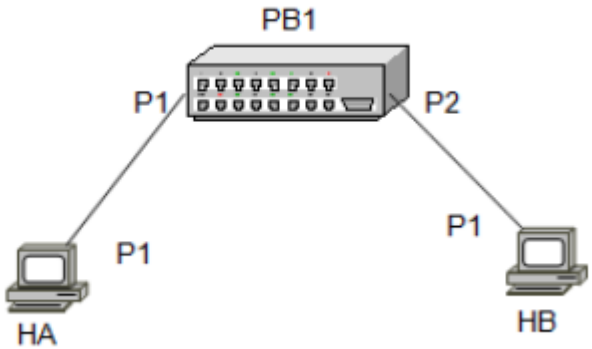

Configuration guidelines

- Configuration of bridge modes.
- Configuration of Unicast Mac status and Unicast Mac limit.
- Configuration of S-VLAN.

Default configurations

All ports are configured as “Provider Network Ports” by default.

Procedure

Configure the Unicast Mac status as “disabled” for port P1 of PB1.

Note: Unicast-mac learning can only be set on a VLAN.

Step	Action

1	Disable the Unicast Mac Learning status.
	`aos#configure terminal`
	`aos(config)# vlan 2`
	`aos(config-if)# switchport unicast-mac learning disable`
	`aos(config)#end`

2	Send five unicast packets of different sources from P1 of HA to P1 of PB1.

3	Verify that the Mac address is not learned on the port P1 using the following command:
	`aos#show mac-address-table`
	`VLAN  Mac Address  Type  Ports`
	`----  ----------  ----  -----`
	`Total Mac Addresses displayed: 0`

4	Configure the Unicast Mac Learning status as enabled for port P1 of PB1. Also configure the Unicast Mac Limit for port P1 as 5.
	`aos#configure terminal`
	`aos(config)# interface gigabitethernet 0/1`

5	Enable the Unicast Mac Learning status for port P1. `aos(config-if)# switchport unicast-mac learning enable`

6	Enable the Unicast Mac Learning Limit as 5 for port P1.
	`aos(config-if)# switchport unicast-mac learning limit 5`
	`aos(config-if)# end`

7	Send 10 unicast packets of different sources from P1 of HA to P1 of PB1.

8	`aos# show mac-address-table`
	`Vlan  Mac Address  Type  Ports`
	`----  ----------  ----  -----`
	`1  00:11:22:33:44:0a  Learnt  Gi0/1`
	`1  00:11:22:33:44:1a  Learnt  Gi0/1`
	`1  00:11:22:33:44:2a  Learnt  Gi0/1`
	`1  00:11:22:33:44:3a  Learnt  Gi0/1`
	`1  00:11:22:33:44:4a  Learnt  Gi0/1`

9	The status of the Unicast Mac Learning status and Mac Limit are viewed using the following command:
	`aos# show provider-bridge port config port gigabitethernet 0/1`
	`Provider Bridge Port configuration table`
	`----------`
	`Port Gi0/1`
	`Port Type  : Provider Network Port`
	`Service VLAN Classification  : PVID`
	`Ingress EtherType  : 0x88a8`
	`Egress EtherType  : 0x88a8`
	`EtherType Swap Status  : Disable`
	`Service VLAN Translation Status  : Enable`
	`Require Drop Encoding  : False`
	`Use_Dei  : False`
	`PCP Selection Row  : 8P0D`
	`Unicast Mac Learning Status  : Enable`
	`Unicast Mac Learning Limit  : 5`
	`----------`

VLAN-Based MAC Address Limiting

Configuration guidelines

- Configuration of bridge modes.
- Configuration of Multicast Mac status and Multicast Mac limit.
- Configuration of S-VLAN.

Default configurations

All ports are ”Provider Network Ports” by default.

Procedure

Configure the Unicast Mac status as “disabled” for VLAN 2 of PB1.

Step	Action

1	Disable the Unicast Mac Learning status for VLAN 2.
	`aos#configure terminal`
	`aos(config)# vlan 2`
	`aos(config-vlan)# set unicast-mac learning enable`
	`aos(config-vlan)#end`

2	Send five unicast packets of different sources from P1 of HA to P1 of PB1.

3	Verify that the Mac address is not learnt on the port P1 using the following command:
	`aos#show mac-address-table`
	`Vlan  Mac Address  Type  Ports`
	`----  ----------  ----  -----`
	`Total Mac Addresses displayed: 0`

4	Configure the Unicast Mac Learning status as enabled for VLAN 2 of PB1 and also configure the Unicast Mac Limit for VLAN 2 as 5.
	`aos#configure terminal`
	`aos(config)# vlan 2`

5	Enable the Unicast Mac Learning status for VLAN 2. `aos(config-vlan)# set unicast-mac learning enable`

6	Enable the Unicast Mac Learning limit as 5 for port P1.
	`aos(config-vlan)# vlan unicast-mac learning limit 5`
	`aos(config-vlan)# end`

7	Send 10 unicast packets of different sources from P1 of HA to P1 of PB1.

8	`aos# show mac-address-table`
	`Vlan  Mac Address  Type  Ports`
	`----  ----------  ----  -----`
	`2  00:11:22:33:44:0a  Learnt  Gi0/1`
	`2  00:11:22:33:44:1a  Learnt  Gi0/1`
	`2  00:11:22:33:44:2a  Learnt  Gi0/1`
	`2  00:11:22:33:44:3a  Learnt  Gi0/1`
	`2  00:11:22:33:44:4a  Learnt  Gi0/1`

9	The status of the Unicast Mac Learning status and Mac limit are viewed using the following command:
	`aos# show vlan learning params`
	`VLAN Id  : 1`
	`Mac Learning Status : Enable`
	`Mac Learning Limit  : 150`
	`----------`
	`Vlan Id  : 2`
	`Mac Learning Status : Enable`
	`Mac Learning Limit  : 5`

Customer controlled provider bridges

Provider bridges placed in the customer network are termed as Customer Controlled Provider Bridges. This provides the customer to choose the services in the customer premises than requesting the provider for services.

The Customer Controlled Provider Edge Bridge provides C-Tagged service interfaces within the customer’s own network. These Customer Controlled Provider Bridges are connected to the Provider Controlled Bridges through CNP S-Tagged interfaces. The communication between the Customer Controlled Provider Bridge and the Connecting Provider Bridge is through S-VLAN tag.

Proprietary Provider Network Port

Proprietary Provider Network Port is mainly used to interop with the Q-in-Q bridges in the provider network. PPNP is always connected to a Q-in-Q bridge in the provider network; else it is considered as misconfiguration.

Note:

- The Ingress ether type of PPNP is always 0x8100.
- Packets received with C-Tag (0x8100) are treated as S-Tag packets and are processed.
- The packet that has to be transmitted on this port with S-Tag has ether type as 0x8100. On PPNP, the Provider Spanning Tree protocol and Provider GVRP protocol transmits the control packets with destination address as defined for customer bridges.
- To transmit the tunneled Customer STP and GVRP packets, the destination Mac address is changed as per the administrator configuration.

260-668462-001
GA Release

WWW.AVIATNETWORKS.COM